Paulmann

Safety Instructions

1,2,3,5,6,7,8,9,11,12,13, 14,15,16,17,21,26,27,31, 32,34,35

Info Hotline
+49 (0) 5041 998 389
Mon. - Do. 7⁰⁰ - 20⁰⁰
Fr. 7⁰⁰ - 17⁰⁰

Paulmann Licht GmbH
31832 Springe / Germany
www.paulmann.com

Art.-Nr.:
925.03
925.04

(+MA 197)

PSU 07/09

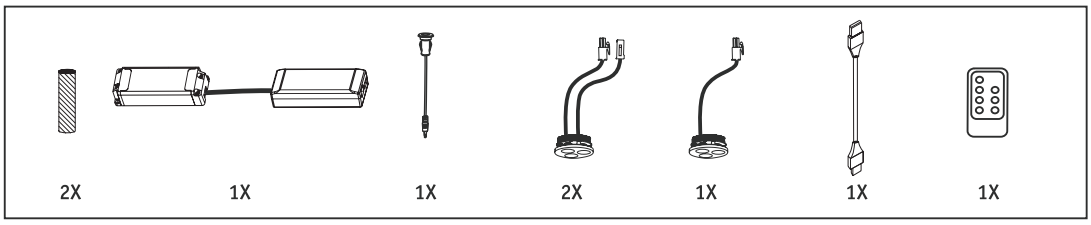

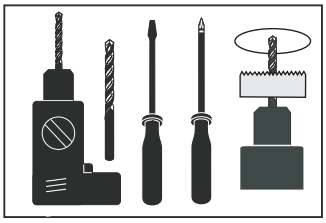

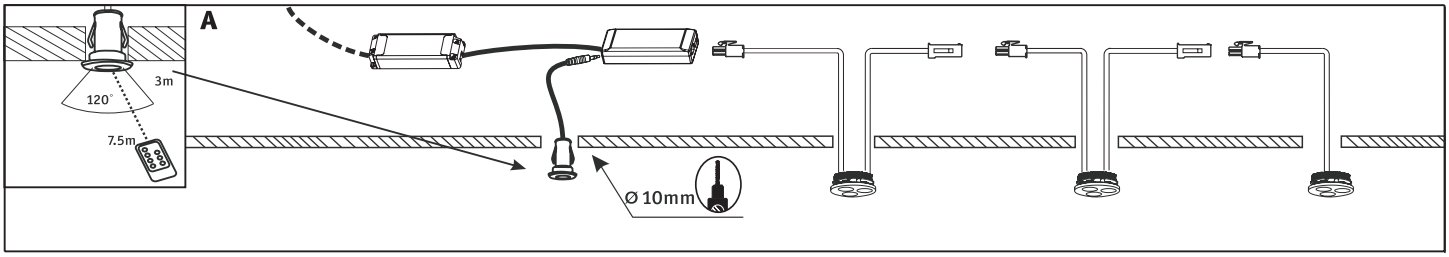

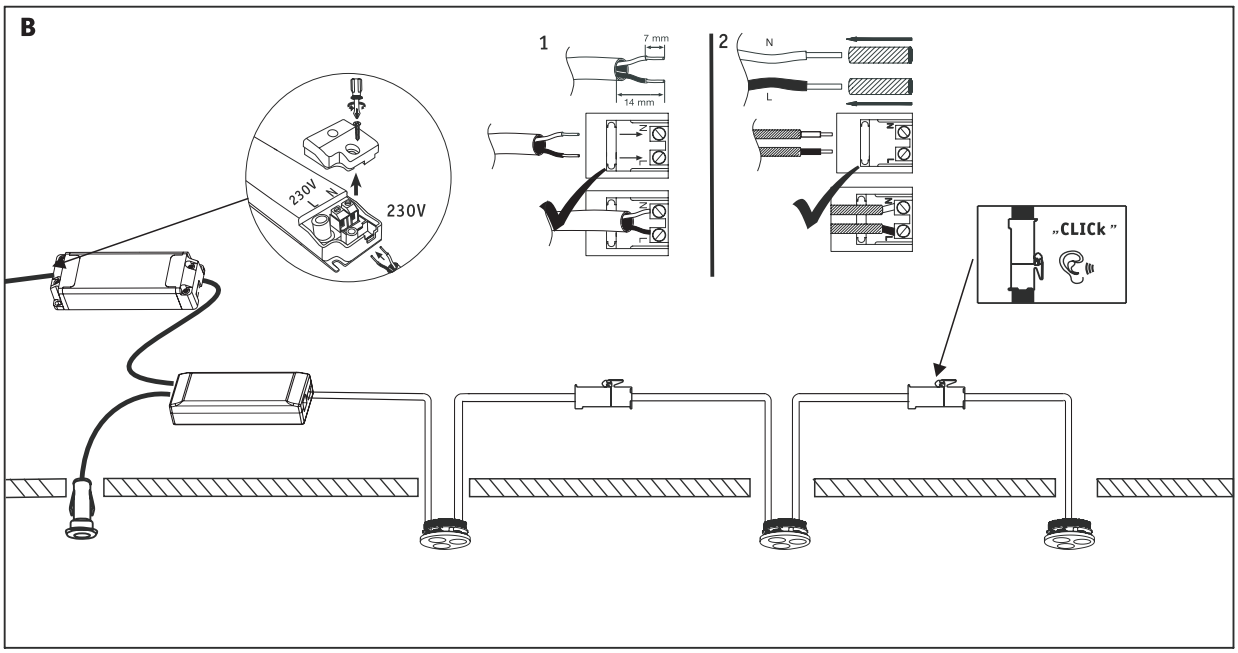

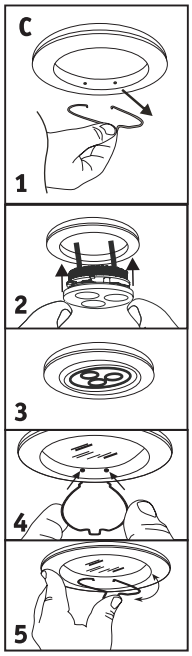

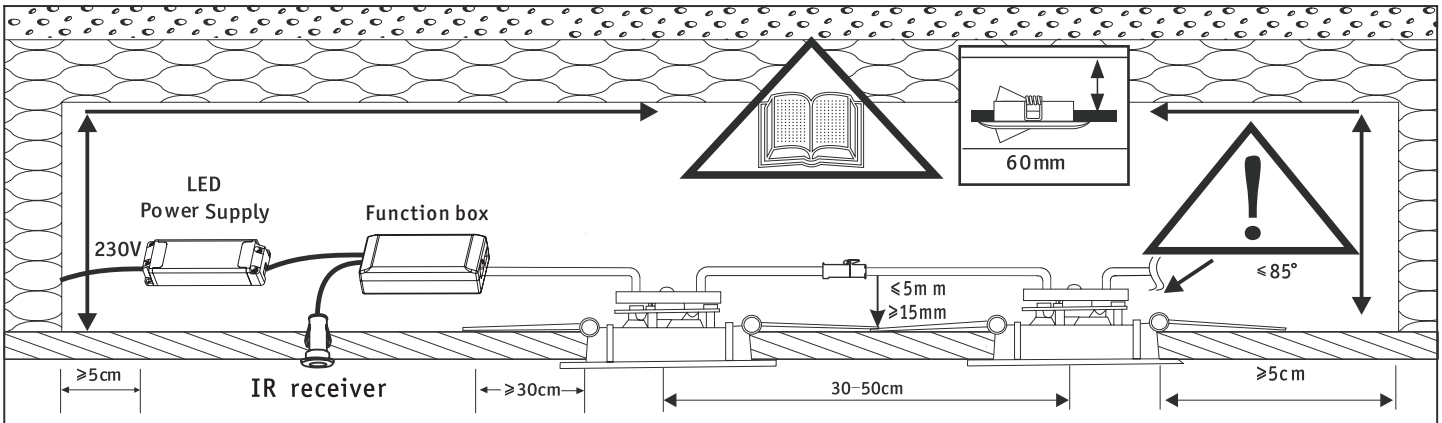

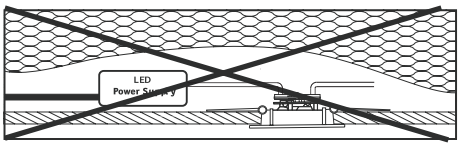

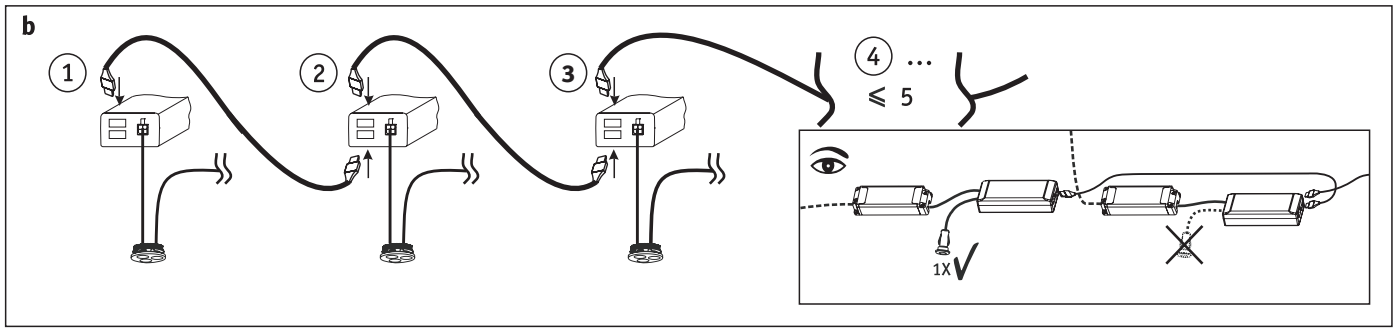
b
1
2
3
4 ...
≤ 5
1X

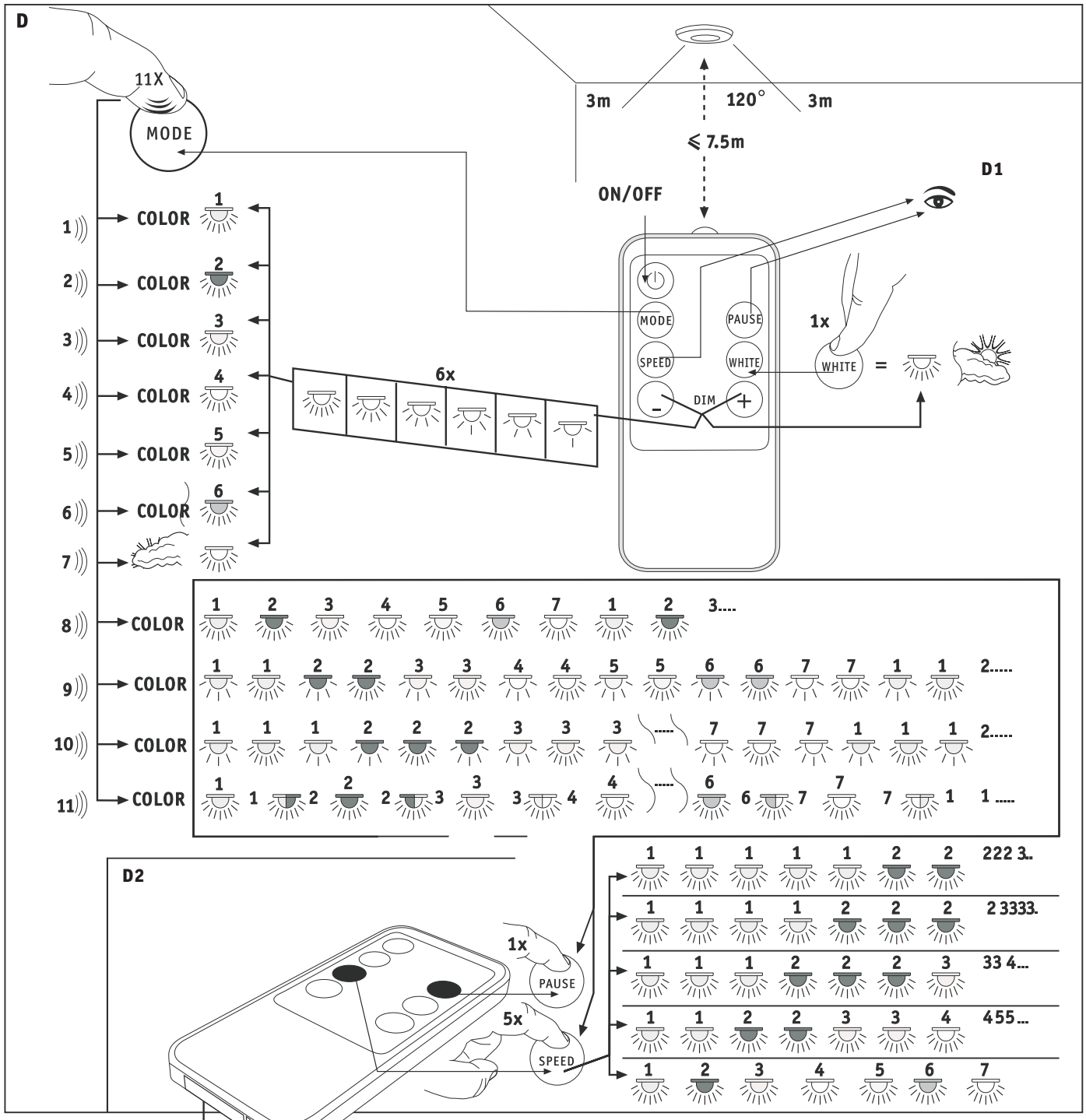
D
11X
MODE
3m
120°
3m
≤ 7.5m
D1
ON/OFF
MODE
PAUSE
SPEED
WHITE
DIM
1x
WHITE
=
6x
1 COLOR 1
2 COLOR 2
3 COLOR 3
4 COLOR 4
5 COLOR 5
6 COLOR 6
7
8 COLOR 1 2 3 4 5 6 7 1 2 3....
9 COLOR 1 1 2 2 3 3 4 4 5 5 6 6 7 7 1 1 2.....
10 COLOR 1 1 1 2 2 2 3 3 3 ..... 7 7 7 1 1 1 2.....
11 COLOR 1 1 2 2 2 3 3 3 4 4 ..... 6 6 7 7 7 1 1 .....
D2
1x
PAUSE
5x
SPEED
1 1 1 1 1 2 2 222 3..
1 1 1 1 2 2 2 2 3333.
1 1 1 2 2 2 3 33 4...
1 1 2 2 3 3 4 455...
1 2 3 4 5 6 7

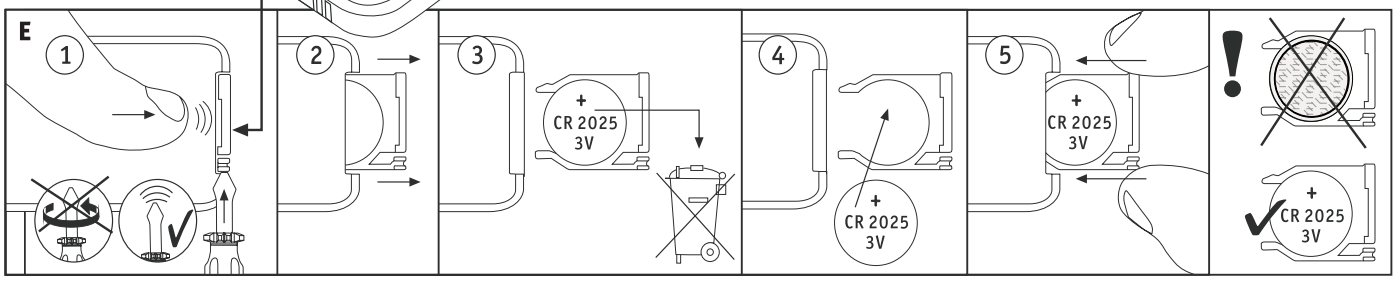
E
1
2
3
+
CR 2025
3V
4
+
CR 2025
3V
5
+
CR 2025
3V
!
+
CR 2025
3V