Art.-Nr.971.11
(+MA 173)

Paulmann

Safety Instructions

0,1,2,3,4,5a,6,7,8,9,10,11,12,13,
14,15,16,17,18,20,21,22,23,24.

Paulmann Licht GmbH
Quezinger Feld 2
D-31832 Springe
www.paulmann.com
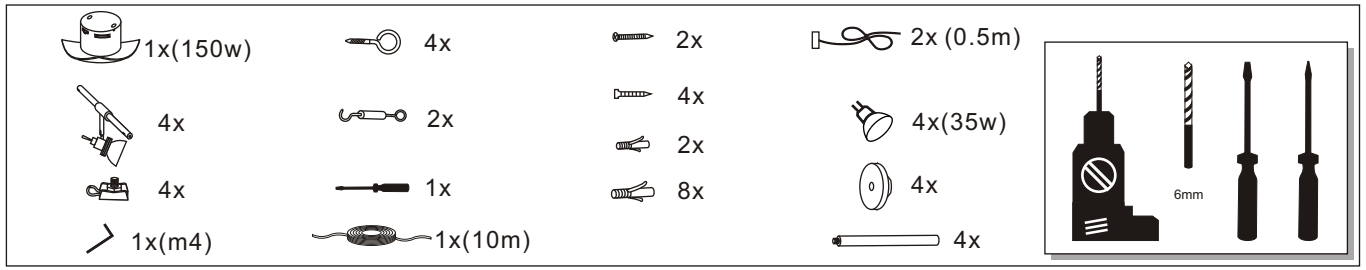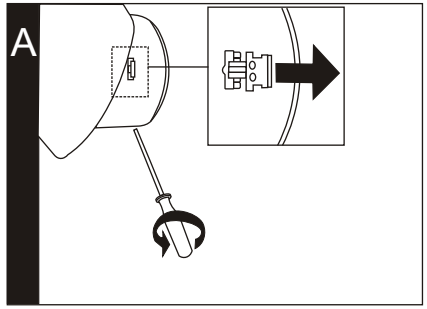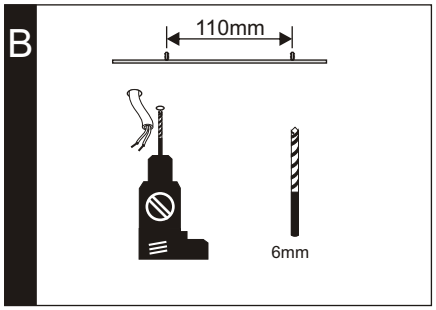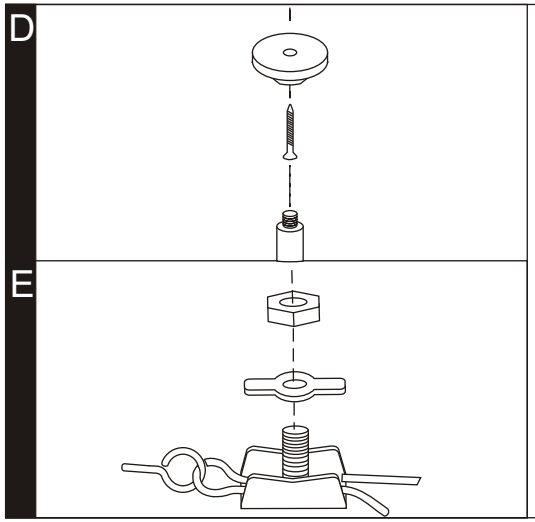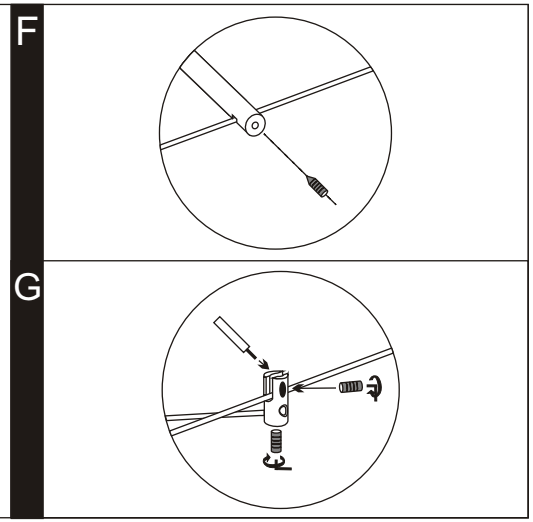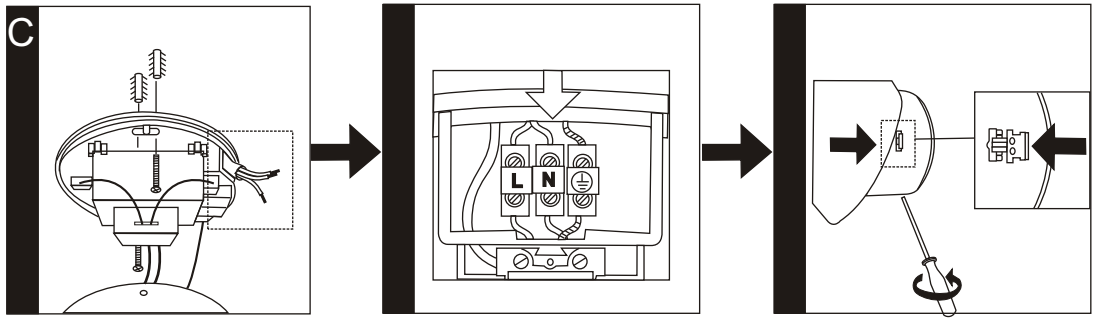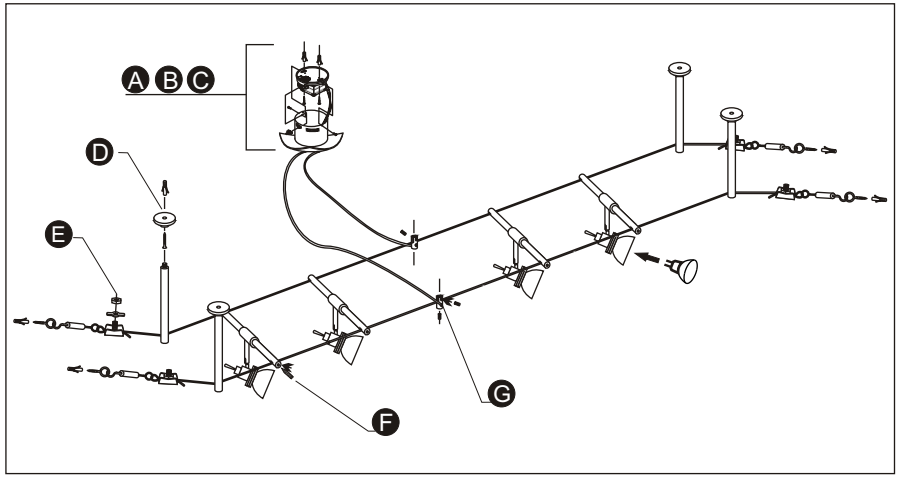
INFO-LINE
☎ +49 (0) 5041 998 389
Mon.-Do. 7⁰⁰-20⁰⁰
Fr. 7⁰⁰-17⁰⁰