F- Veuillez respecter les consignes de sécurité.(**0,1,2,4,6,7,8,9,10,11,15,22.**)
D- Bitte beachten Sie die Sicherheitshinweise! (**0,1,2,4,6,7,8,9,10,11,15,22.**)
NL- Houd u a.u.b. de veiligheidsvoorschriften in acht. (**0,1,2,4,6,7,8,9,10,11,15,22.**)
GB- Please adhere to safety instructions. (**0,1,2,4,6,7,8,9,10,11,15,22.**)
E- Presté atención a las normas de seguridad (**0,1,2,4,6,7,8,9,10,11,15,22.**)
PL- Proszę przestrzegać poniższych przepisów bezpieczeństwa (**0,1,2,4,6,7,8,9,10,11,15,22.**)
RUS- Обращайте внимание на указания по безопасности. (**0,1,2,4,6,7,8,9,10,11,15,22.**)
LV- Lūdzu,ievērojiet drošības norādījumus! (**0,1,2,4,6,7,8,9,10,11,15,22.**)
CZ- Prosím dodržujte tyto bezpečnostní předpisy. (**0,1,2,4,6,7,8,9,10,11,15,22.**)
I- Per favore seguire le norme di sicurezza (**0,1,2,4,6,7,8,9,10,11,15,22.**)
DK- Vær meget opmærksom på disse sikkerhedsanvisninger. (**0,1,2,4,6,7,8,9,10,11,15,22.**)
FIN- Huomio turvallisuusohjeet. (**0,1,2,4,6,7,8,9,10,11,15,22.**)
H- Kerjük a Biztonsagi Elörasokat szigoruan betartani. (**0,1,2,4,6,7,8,9,10,11,15,22.**)
TR- Güvenlik hakkxndaki bilgilere dikkat ediniz. (**0,1,2,4,6,7,8,9,10,11,15,22.**)

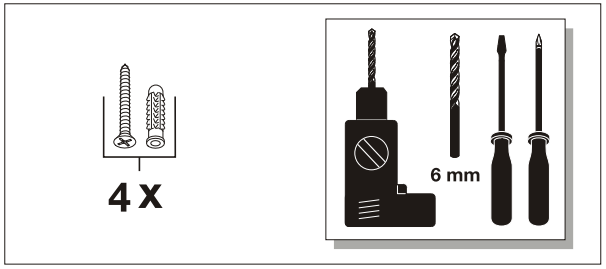

3 Jahre • Ans • Years • Jaar
ausgenommen Leuchtmittel
ampoules exceptés • exept lamps
vif gezonderd de lampen
GARANTIE

PAULMANN *LICHT* GmbH
Quezinger Feld 2 • D-31832 Springe
www.Paulmann.de

A

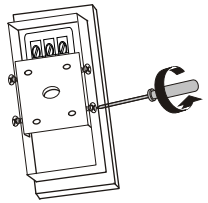

B

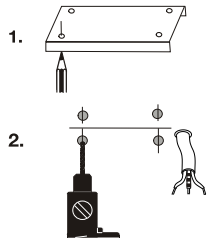

C

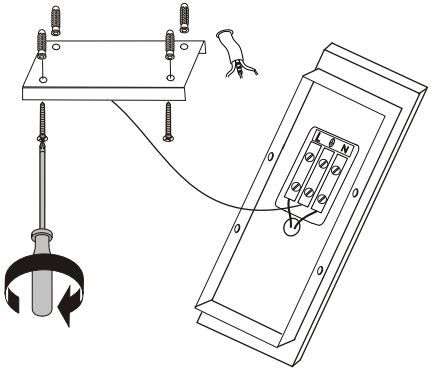

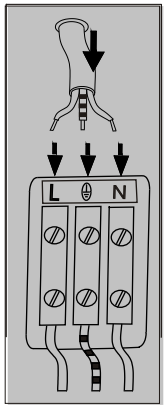

D

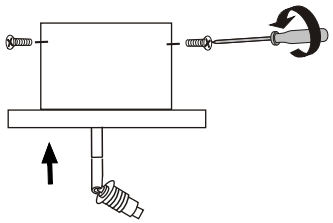

E

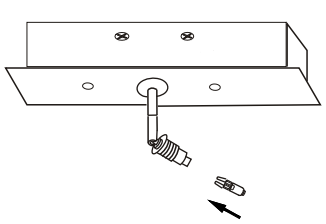

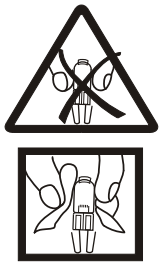

F

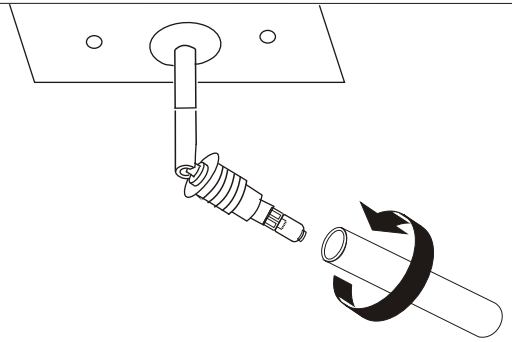

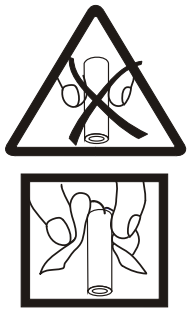

660.40

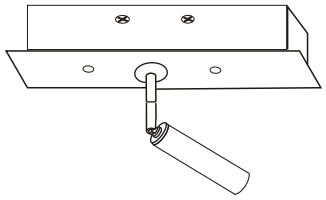

660.41

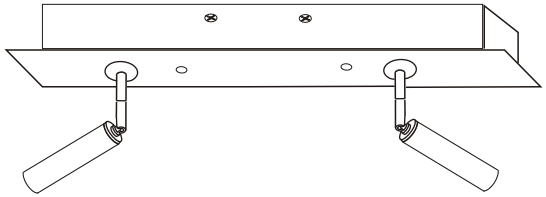
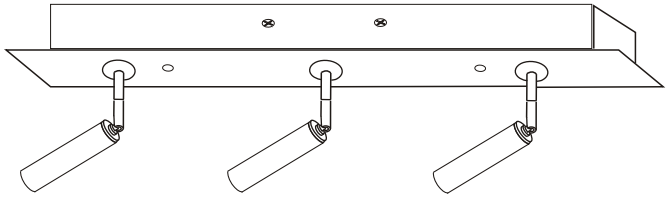
660.42