F- Veuillez respecter les consignes de sécurité. (0,1,2,4,6,7,8,9,10,11,15,18,20,22.)
D- Bitte beachten Sie die Sicherheitshinweise! (0,1,2,4,6,7,8,9,10,11,15,18,20,22.)
NL- Houd u a.u.b. de veiligheidsvoorschriften in acht. (0,1,2,4,6,7,8,9,10,11,15,18,20,22.)
GB- Please adhere to safety instructions. (0,1,2,4,6,7,8,9,10,11,15,18,20,22.)
E- Presté atención a las normas de seguridad (0,1,2,4,6,7,8,9,10,11,15,18,20,22.)
PL- Proszę przestrzegać poniższych przepisów bezpieczeństwa (0,1,2,4,6,7,8,9,10,11,15,18,20,22.)
RUS- Обращайте внимание на указания по безопасности. (0,1,2,4,6,7,8,9,10,11,15,18,20,22.)
LV- Lūdzu, ievērojiet drošibas norādijumus ! (0,1,2,4,6,7,8,9,10,11,15,18,20,22.)
CZ- Prosím dodržujte tyto bezpečnostní předpisy. (0,1,2,4,6,7,8,9,10,11,15,18,20,22.)
I- Per favore Seguire le norme di sicurezza (0,1,2,4,6,7,8,9,10,11,15,18,20,22.)
DK- Vær meget opmærksom På disse sikkerhedsanvisninger. (0,1,2,4,6,7,8,9,10,11,15,18,20,22.)
FIN- Huomio turvallisuusohjeet. (0,1,2,4,6,7,8,9,10,11,15,18,20,22.)
H- Kerjük a Biztonsagi Elöirasokat szigoruan betartani. (0,1,2,4,6,7,8,9,10,11,15,18,20,22.)
TR- Güvenlik hakkxndaki bilgilere dikkat ediniz. (0,1,2,4,6,7,8,9,10,11,15,18,20,22.)

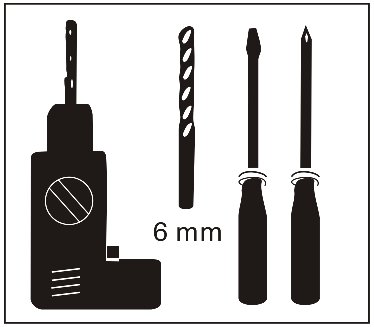

3 GARANTIE
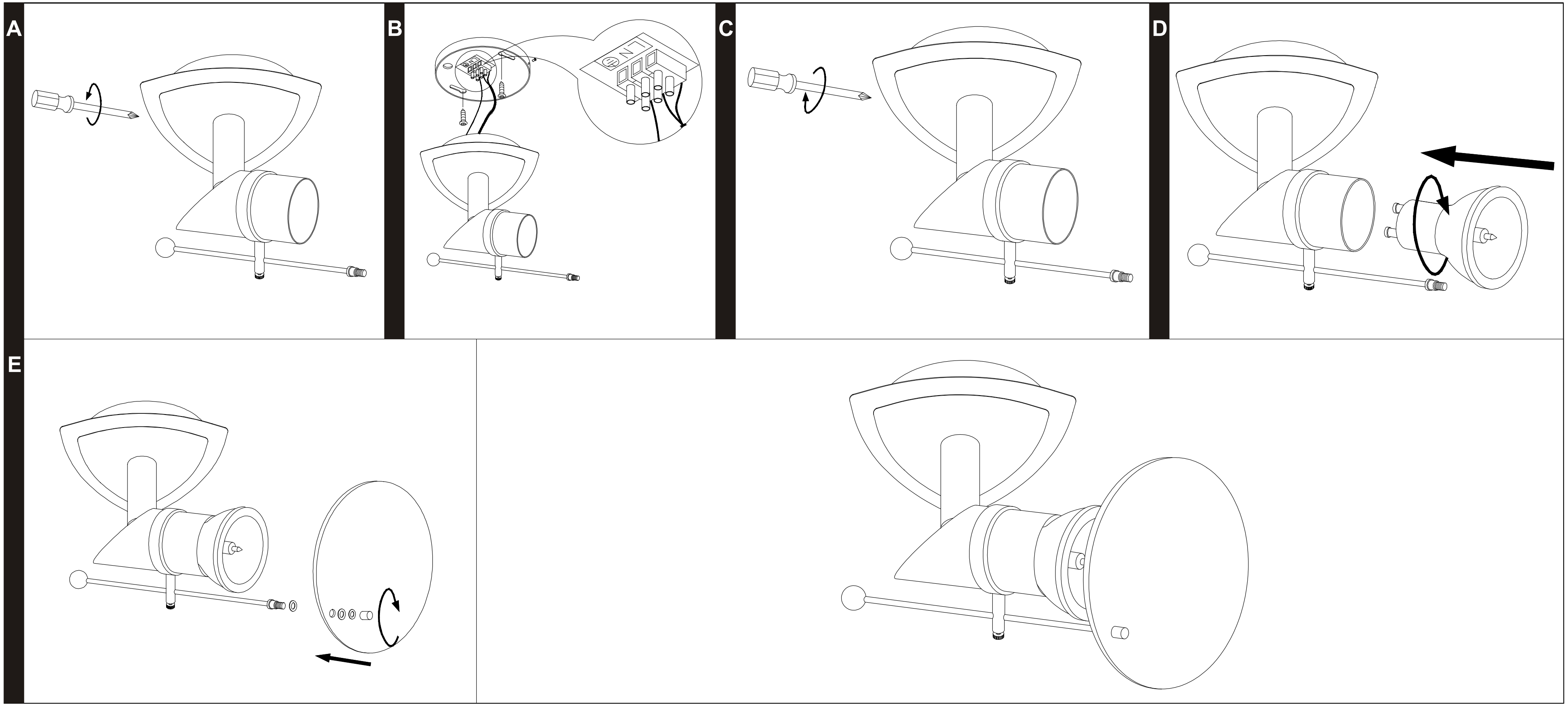
PAULMANN *LICHT* GmbH
Quezinger Feld 2 • D-31832 Springe
www.Paulmann.de