F- Veuillez respecter les consignes de sécurité. (0,1,2,3,4,5b,6,7,8,9,11,12,13,15,18,20,21,22,23.)

D- Bitte beachten Sie die Sicherheitshinweise! (0,1, 2,3,4,5b,6,7,8,9,11,12,13,15,18,20,21,22,23.)

NL- Houd u a.u.b. de veiligheidsvoorschriften in acht. (0,1,2,3,4,5b,6,7,8,9,11,12,13,15,18,20,21,22,23.)

GB- Please adhere to safety instructions. (0,1,2,3,4,5b,6,7,8,9,11,12,13,15,18,20,21,22,23.)

E- Presté atención a las normas de seguridad (0,1,2,3,4,5b,6,7,8,9,11,12,13,15,18,20,21,22,23.)

PL- Proszę przestrzegać poniższych przepisów bezpieczeństwa (0,1,2,3,4,5b,6,7,8,9,11,12,13,15,18,20,21,22,23.)

RUS- Обращайте внимание на указания по безопасности. (0,1,2,3,4,5b,6,7,8,9,11,12,13,15,18,20,21,22,23.)

LV- Lūdzu,ievērojiet drošibas norādijumus ! (0,1,2,3,4,5b,6,7,8,9,11,12,13,15,18,20,21,22,23.)

CZ- Prosím dodržujte tyto bezpečnostní předpisy. (0,1,2,3,4,5b,6,7,8,9,11,12,13,15,18,20,21,22,23.)

I- Per favore seguire le norme di sicurezza (0,1,2,3,4,5b,6,7,8,9,11,12,13,15,18,20,21,22,23.)

DK- Vær meget opmærksom på disse sikkerhedsanvisninger. (0,1,2,3,4,5b,6,7,8,9,11,12,13,15,18,20,21,22,23.)

FIN- Huomio turvallisuusohjeet. (0,1,2,3,4,5b,6,7,8,9,11,12,13,15,18,20,21,22,23.)

H- Kerjük a Biztonsagi Elöirasokat szigoruan betartani. (0,1,2,3,4,5b,6,7,8,9,11,12,13,15,18,20,21,22,23.)
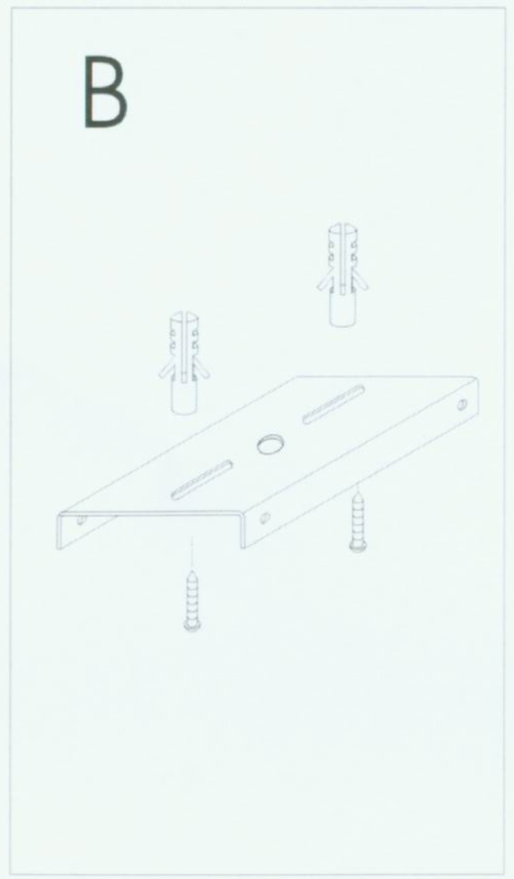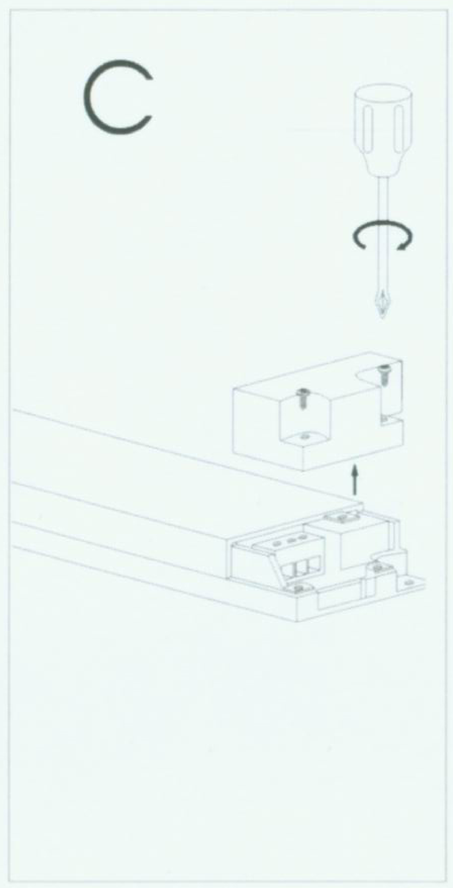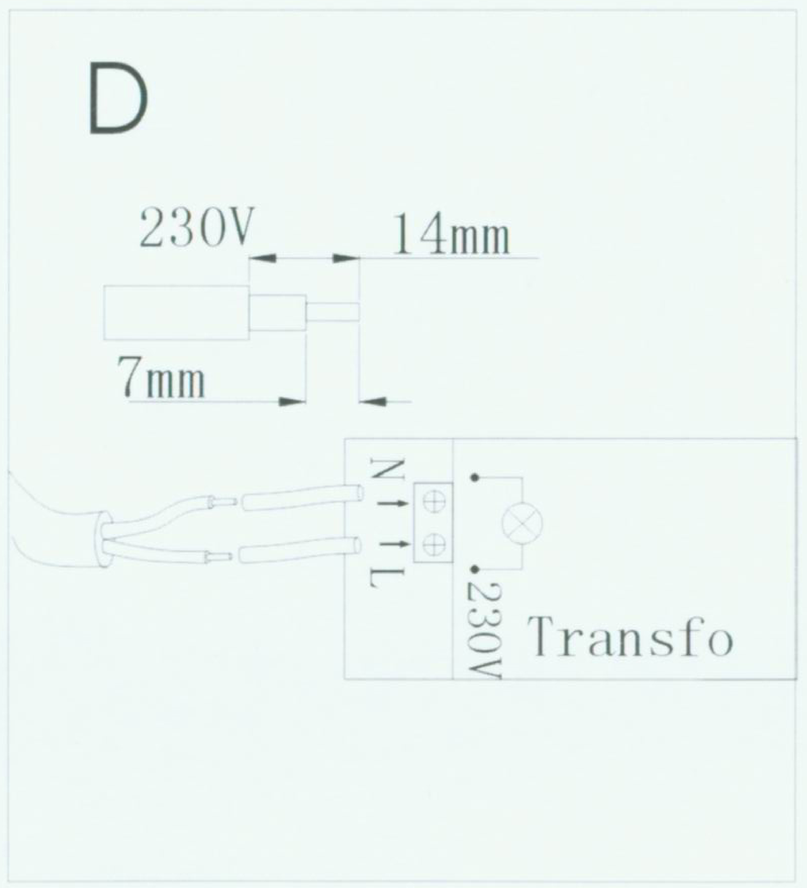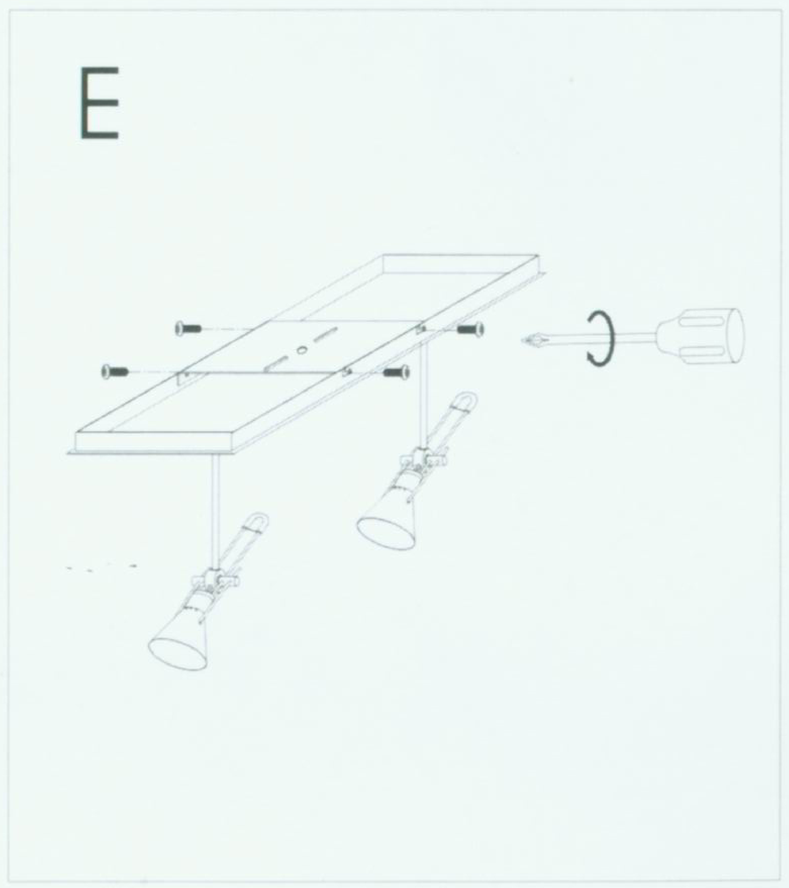
TR- Güvenlik hakkxndaki bilgilere dikkat ediniz. (0,1,2,3,4,5b,6,7,8,9,11,12,13,15,18,20,21,22,23