Paulmann

Safety Instructions

0, 1, 2, 4, 6, 7, 8, 9, 11, 12, 15, 18, 20, 22, 27

Info Hotline
+49(0)5041 998 389
Mon.-Do. 7⁰⁰-20⁰⁰
Fr. 7⁰⁰-17⁰⁰

Paulmann Licht Gmbh
31832 Springe/Germany
www.paulmann.com

Art.-Nr.:
70163
(+MA173)
PLCZ 04/10

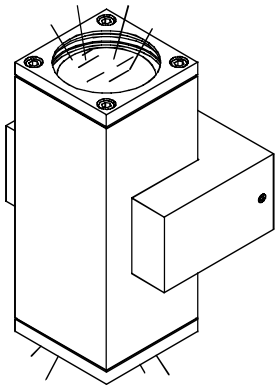

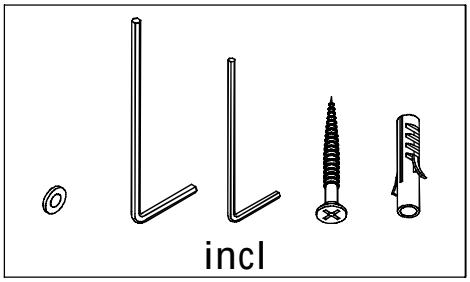

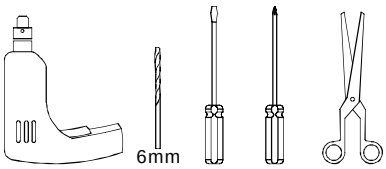

A

Safet Instructions Nr. 0, 1

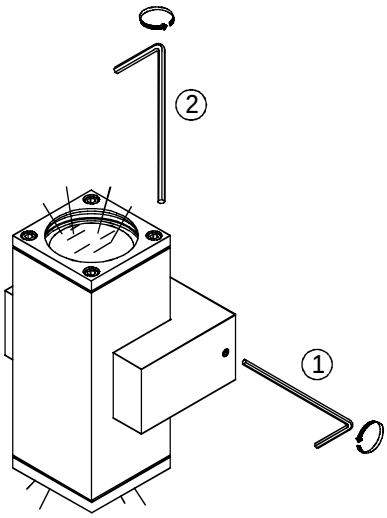

B

Safet Instructions Nr. 0, 1, 2

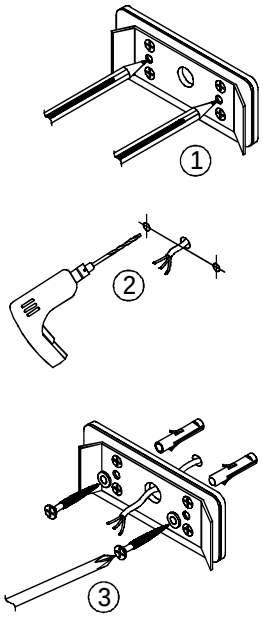

C

Safet Instructions Nr. 0, 1, 4

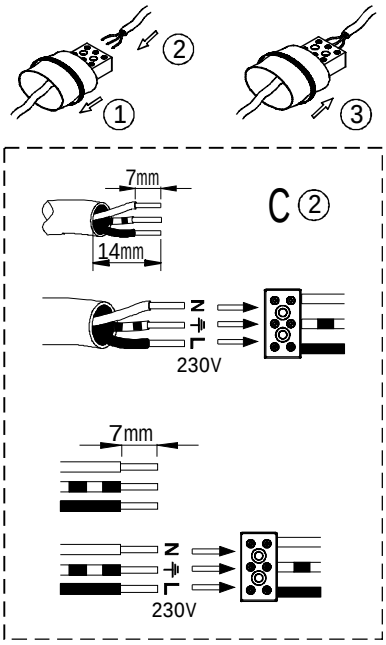

D

Safet Instructions Nr. 0, 1

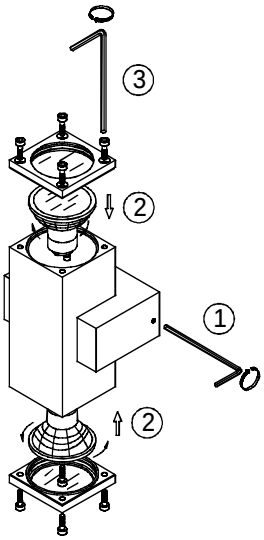

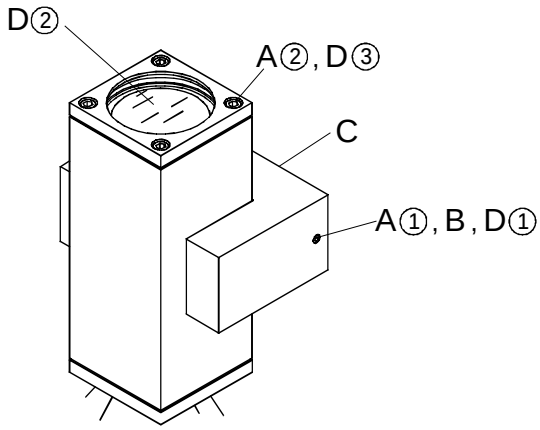

Safet Instructions Nr. 9

>0.5m= 0.5 m