Paulmann

Safety Instructions

0,1,2,4,5b,6,7,8,9,11,12, 15,16,17,19,20,21,22,23, 25,26,27

Info Hotline +49 (0) 5041 998 389
Mon.-Do. 7⁰⁰-20⁰⁰
Fr. 7⁰⁰-17⁰⁰

Paulmann Licht GmbH
31832 Springe / Germany
www.paulmann.com

Art.-Nr.: 93529/ 93530/93531/ 93532/93533/ 93534/93535/ 93536/93537/ 93538/93539/ 93540
(+MA 173)
PDG 05/12

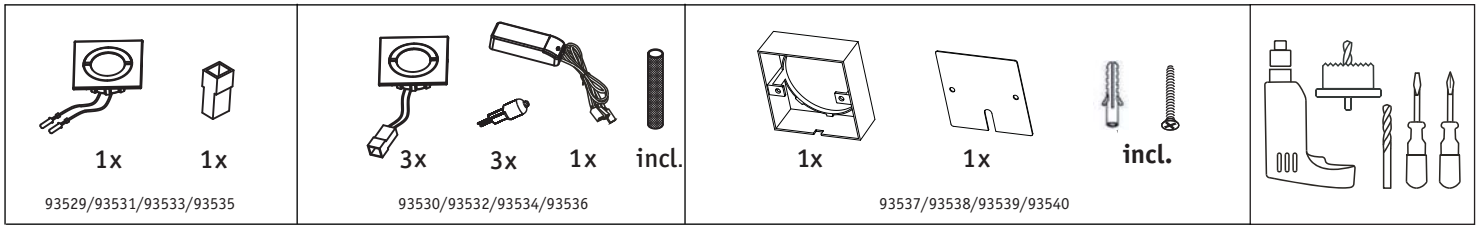

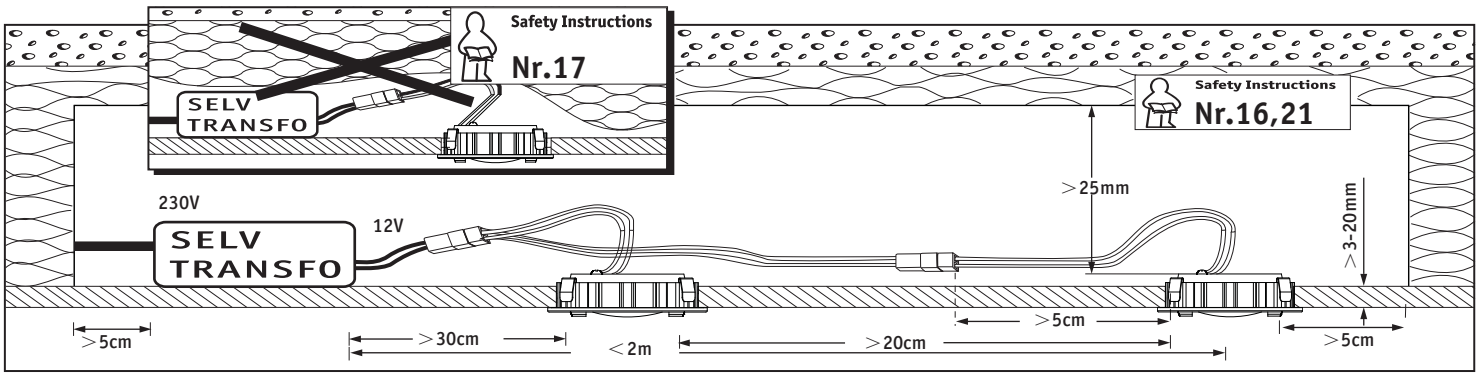

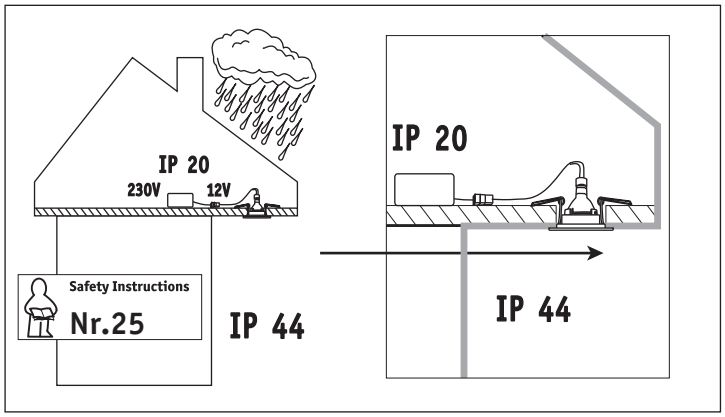

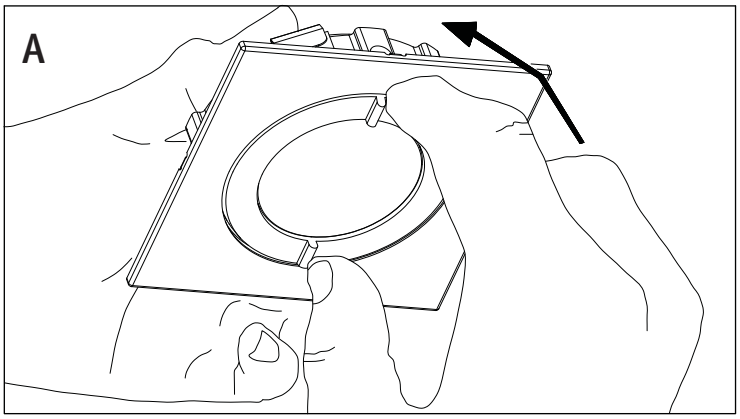

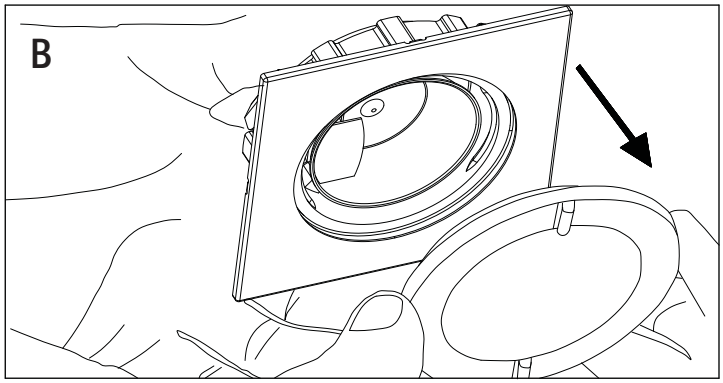

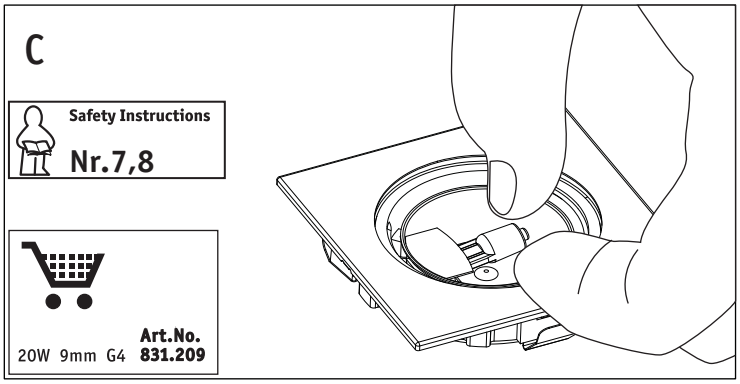

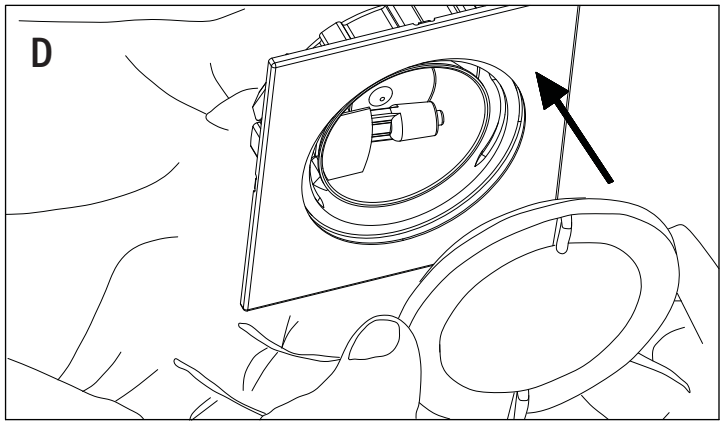

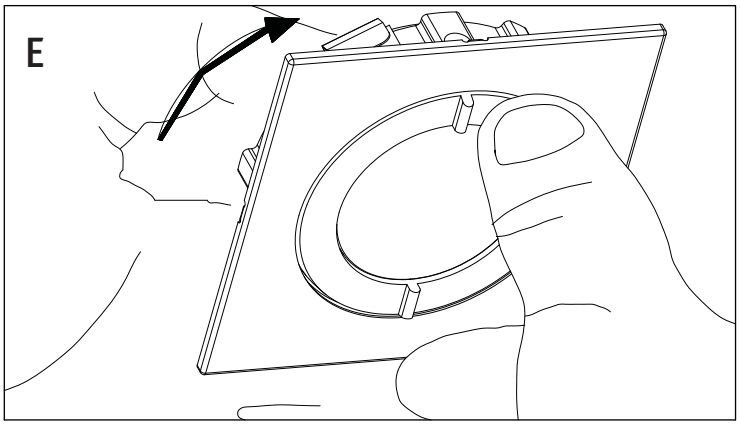

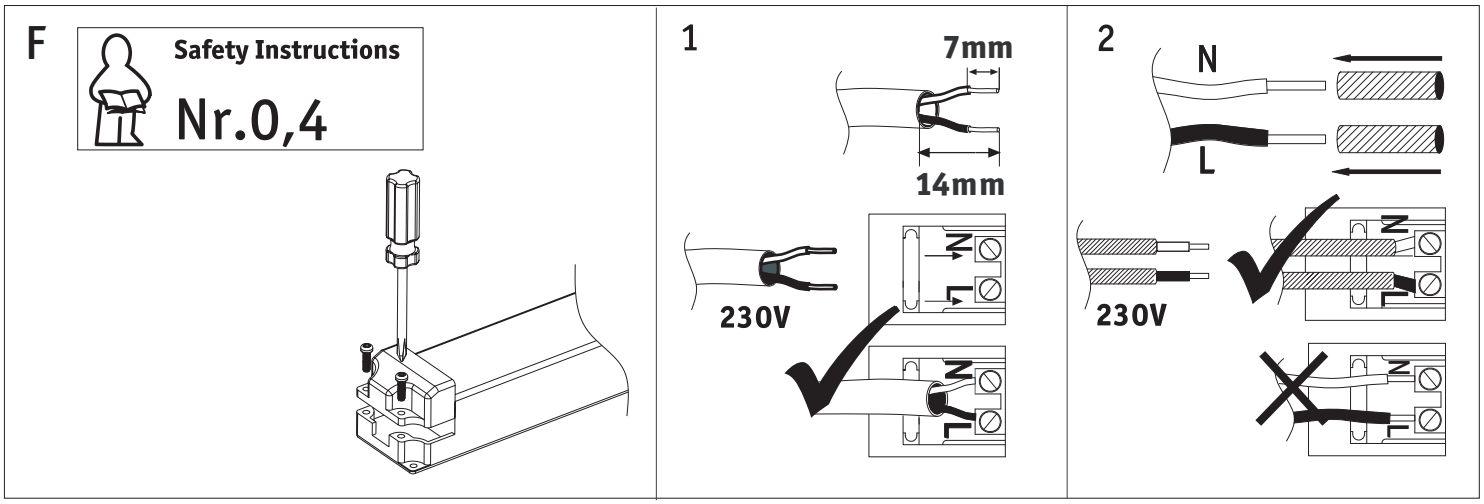
F
Safety Instructions
Nr.0,4
1
7mm
14mm
230V
N
L
2
N
L
230V

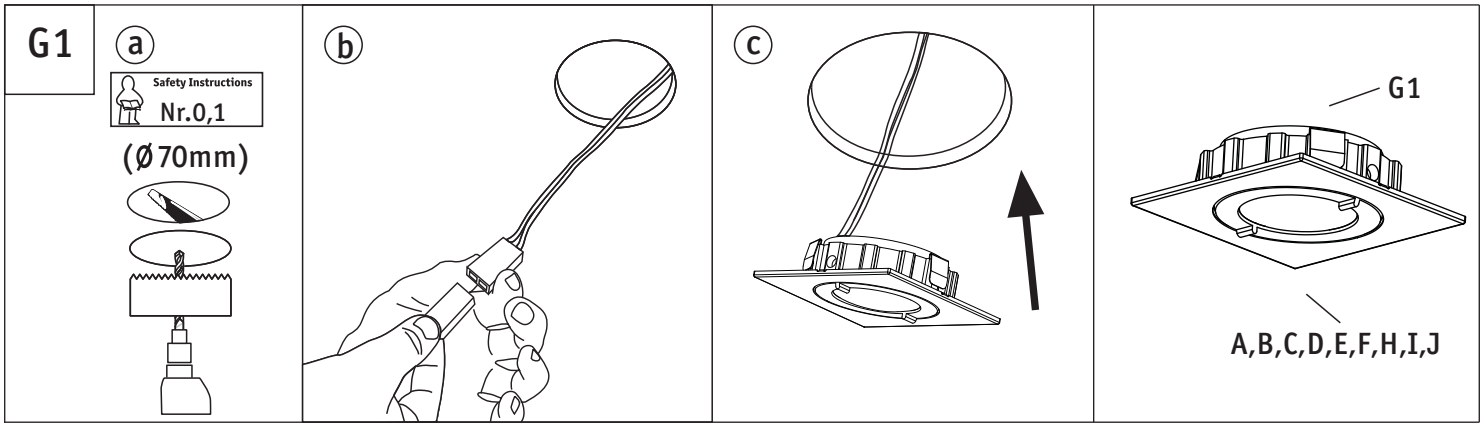
G1
a
Safety Instructions
Nr.0,1
(Ø70mm)
b
c
G1
A,B,C,D,E,F,H,I,J

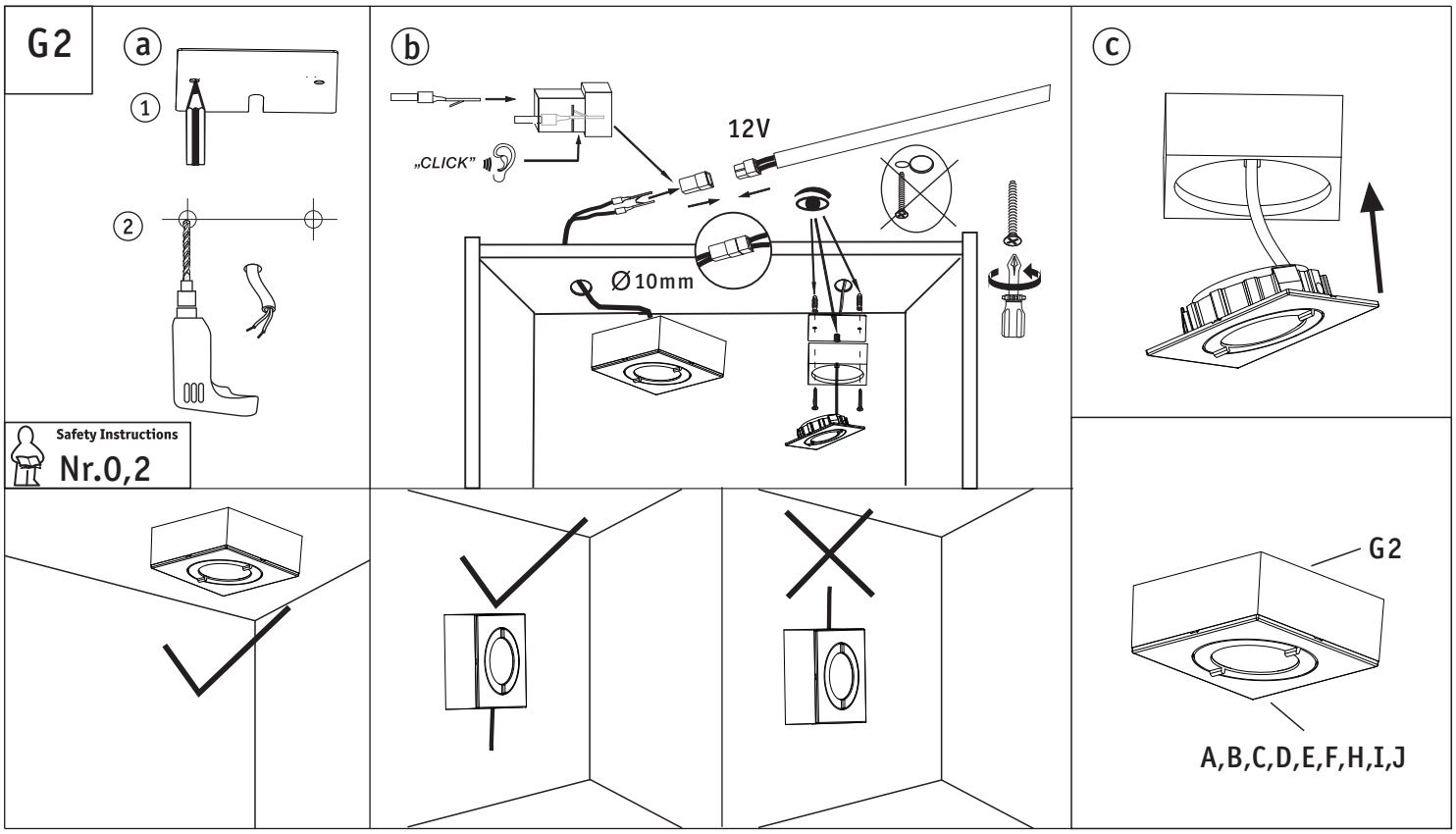
G2
a
1
2
Safety Instructions
Nr.0,2
b
„CLICK"
12V
Ø10mm
c
G2
A,B,C,D,E,F,H,I,J

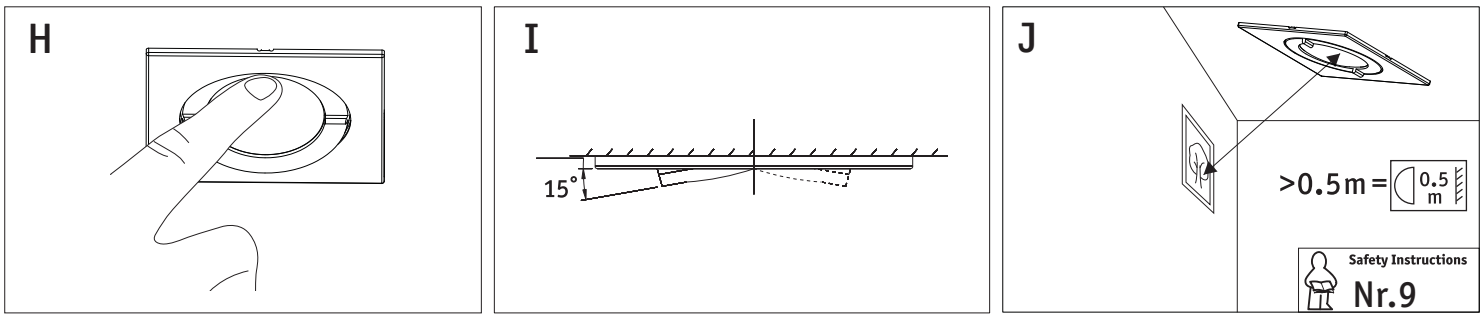
H
I
15°
J
>0.5m =
0.5 m
Safety Instructions
Nr.9