Paulmann

# Safety Instructions

0,1,4,6,7,8,9,
11,15,23,26,27

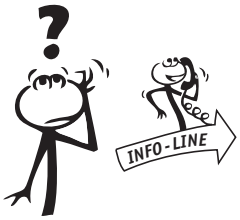


Paulmann Licht GmbH
31832 Springe / Germany
www.paulmann.com

+49 (0) 5041 998 389
Mon. - Do. 7⁰⁰ - 20⁰⁰
Fr. 7⁰⁰ - 17⁰⁰

Art.-Nr.:
94025/94026
94027/94029
94044/94045
94046/94047
(+MA 173)
v01

| Gu4 1x35W | G5.3 1x35W | Gu4 2x20W | G5.3 1x50W | G5.3 1x35W | G5.3 1x35W | G5.3 1x35W |
|---|---|---|---|---|---|---|
| 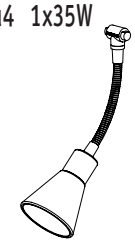 | 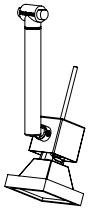 | 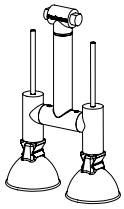 | 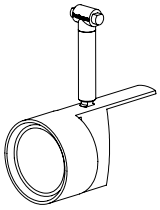 | 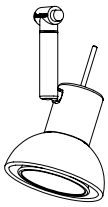 | 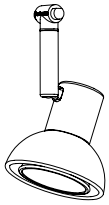 | 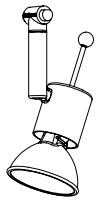 |
| 94025/94026 | 94027 | 94029 | 94044 | 94045 | 94046 | 94047 |

A

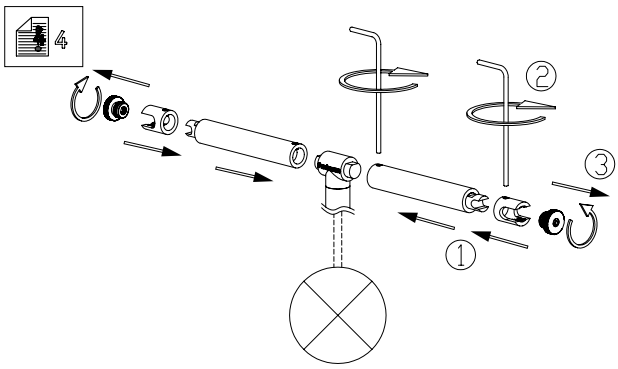


B

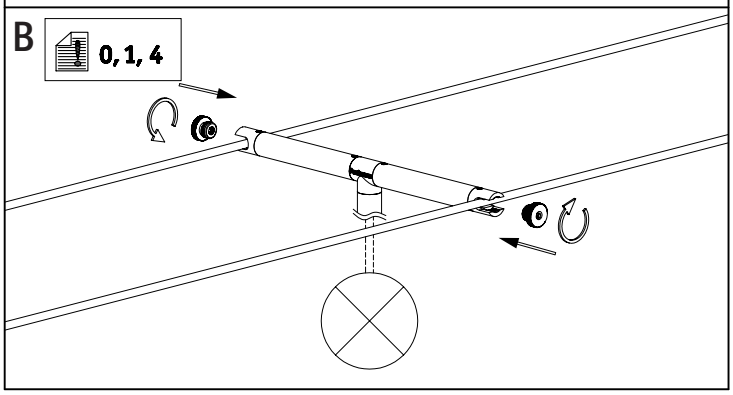


A 1

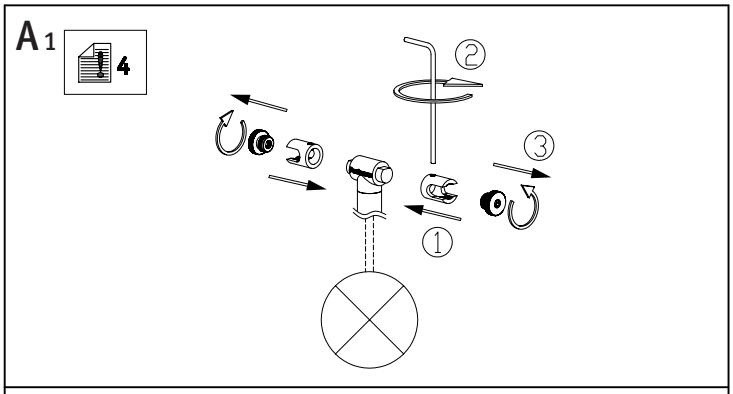


B 1

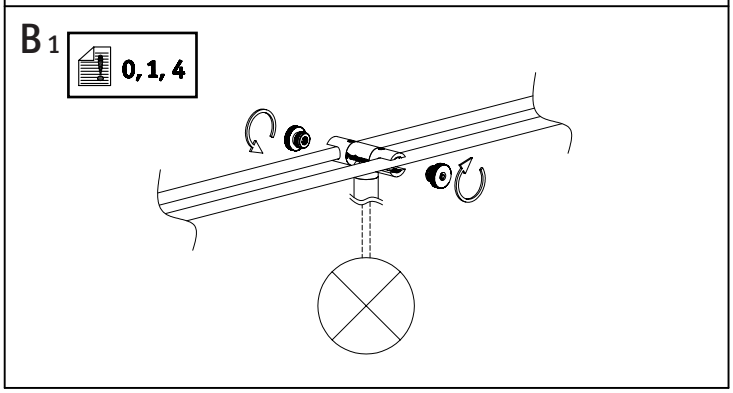


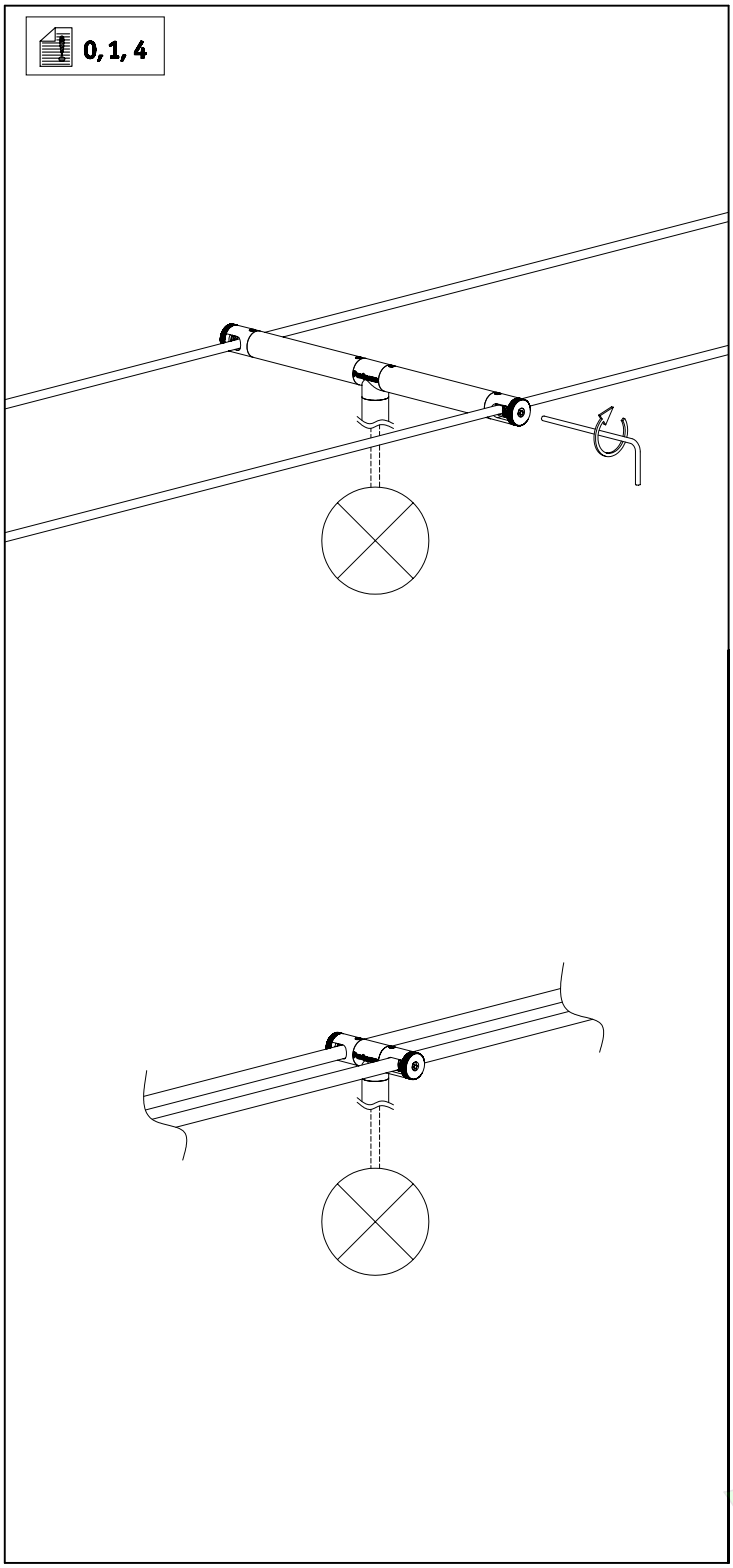

Paulmann

# Safety Instructions

0,1,4,6,7,8,9,
11,15,23,26,27

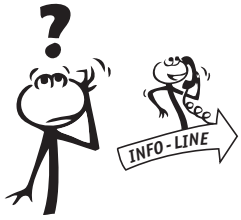


Paulmann Licht GmbH
31832 Springe / Germany
www.paulmann.com

+49 (0) 5041 998 389
Mon. - Do. $7^{00}$ - $20^{00}$
Fr. $7^{00}$ - $17^{00}$

Art.-Nr.:
94025/94026
94027/94029
94044/94045
94046/94047
(+MA 173)
v01

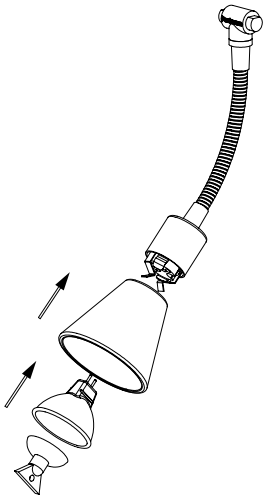

94025/94026

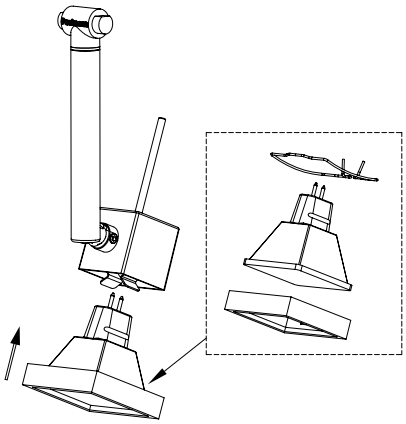

94027

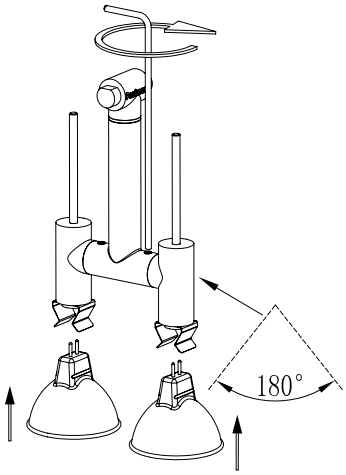


94029

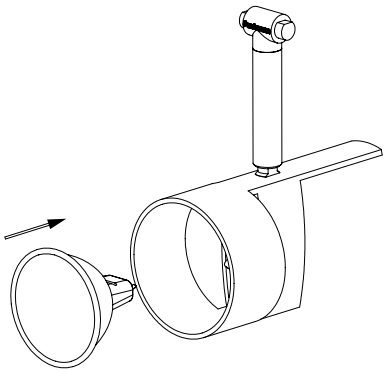

94044

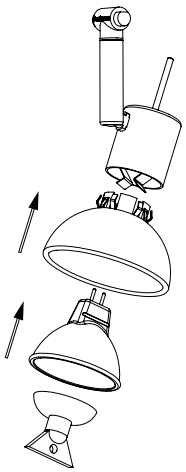

94045

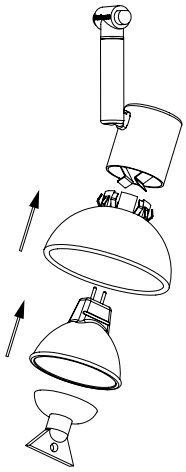

94046

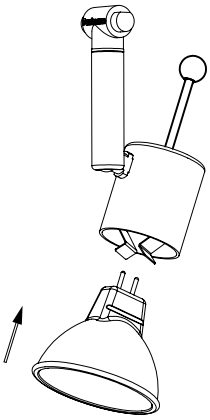

94047