Paulmann

Safety Instructions

0,1,2,3,4,7,8,9,10, 11,15,17,18,20,22, 24,27

Info Hotline +49 (0) 5041 998 389
Mon. - Do. 7⁰⁰ - 20⁰⁰
Fr. 7⁰⁰ - 17⁰⁰

Paulmann Licht GmbH
31832 Springe / Germany
www.paulmann.com

Art.-Nr.:
951.98
951.99

(+MA 173)
PBO 05/14

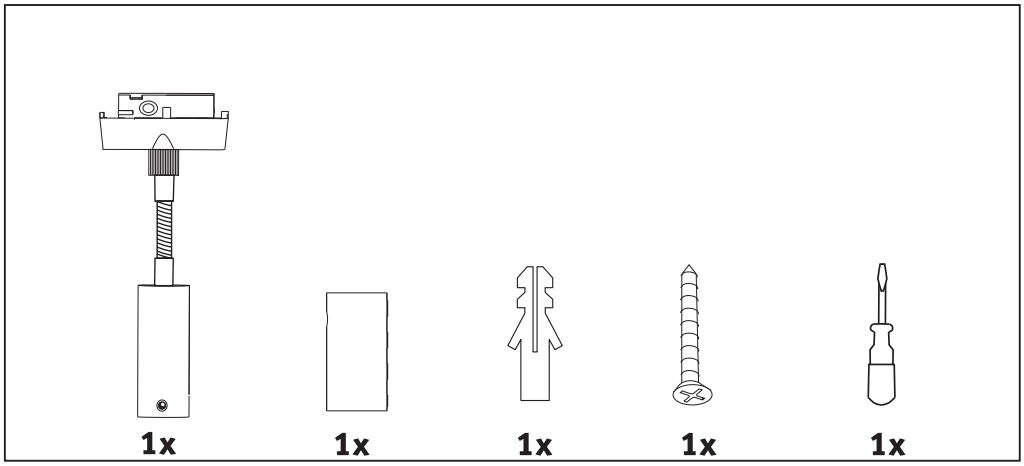

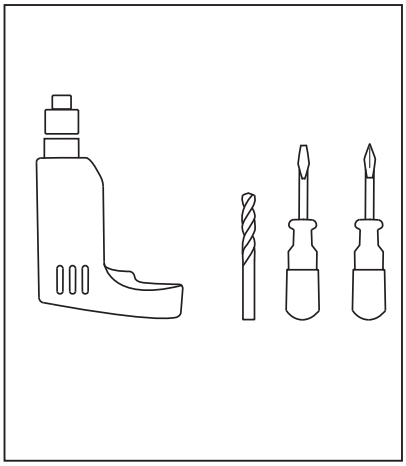

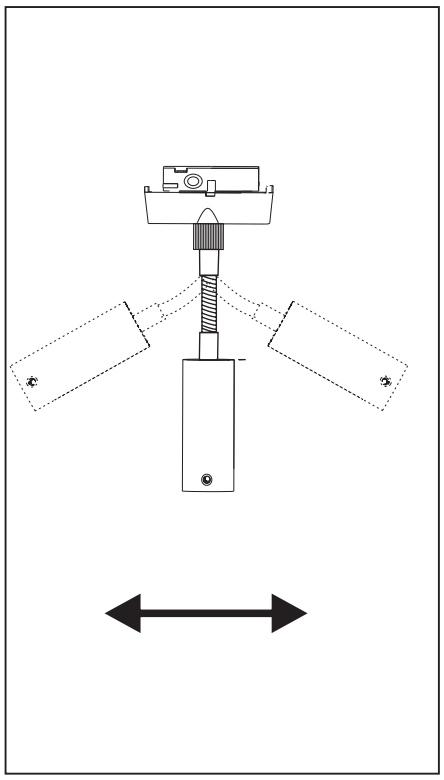

A

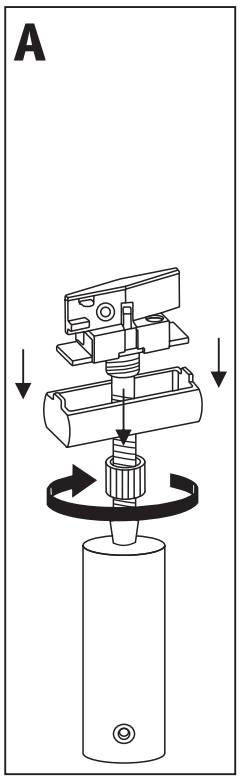

B

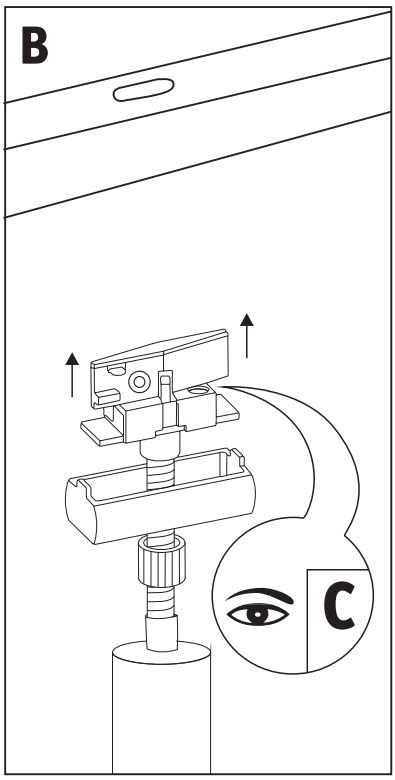

C

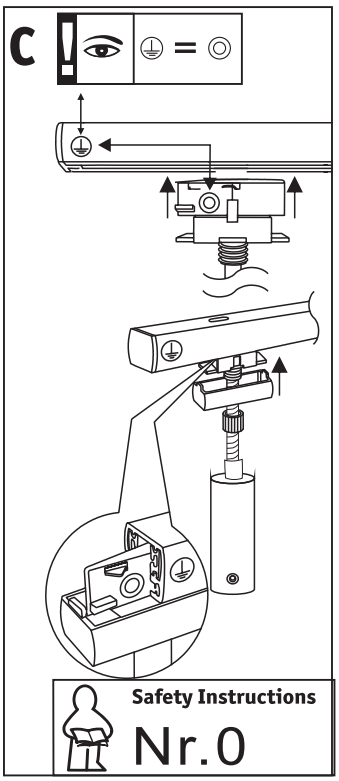

D

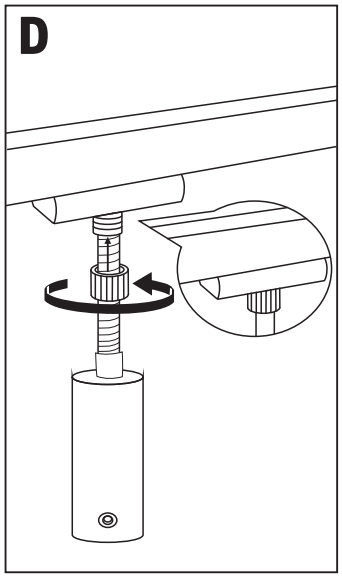

E

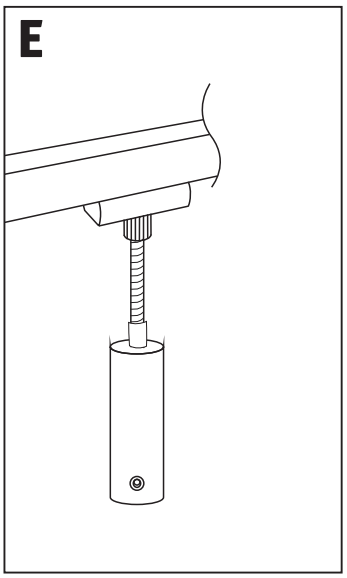

F

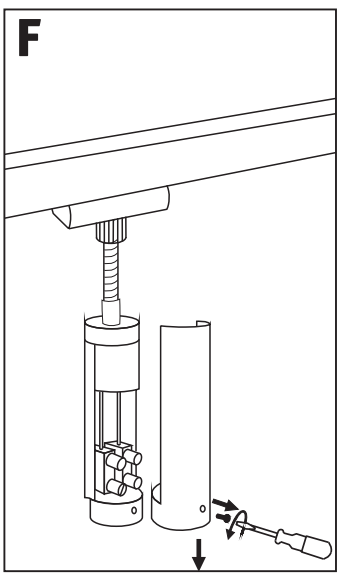

G

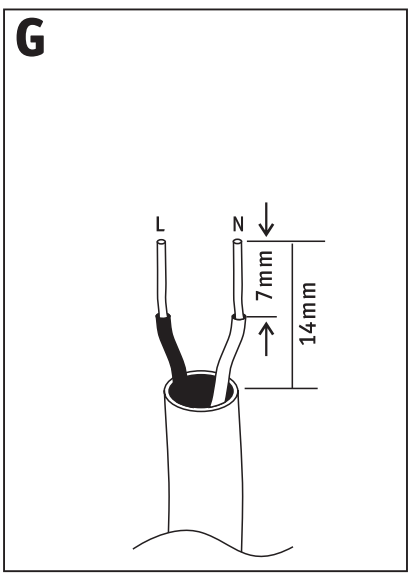

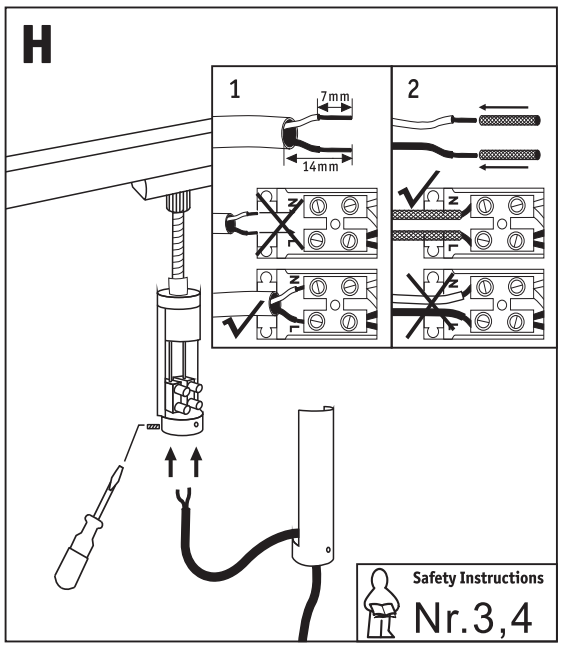
H
1
7mm
14mm
2
N
L
Safety Instructions
Nr.3,4

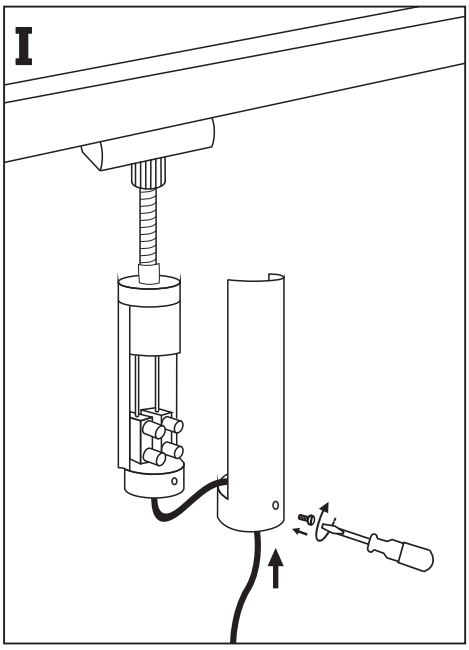
I

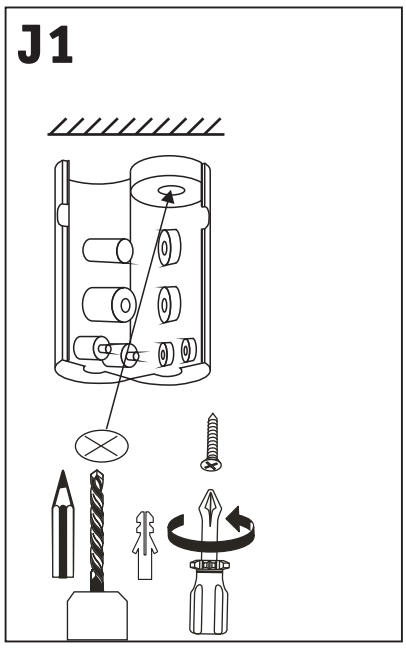
J1

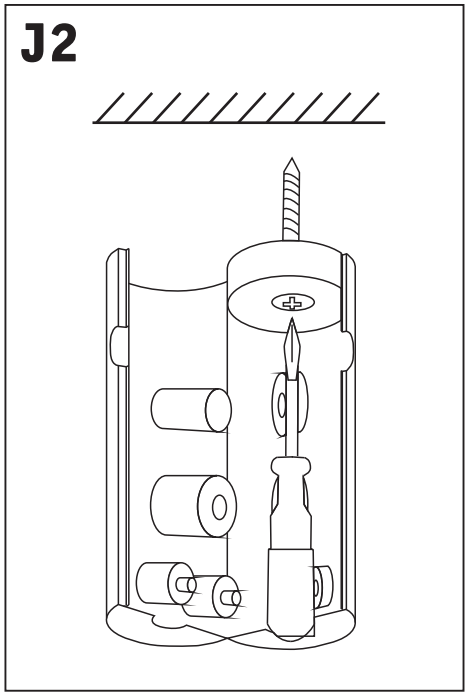
J2

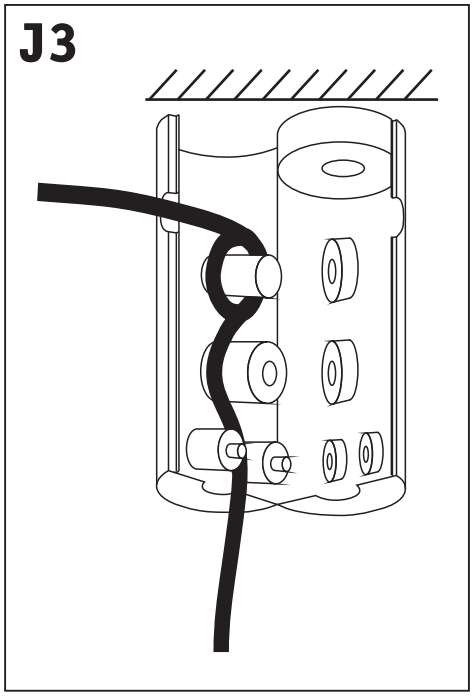
J3

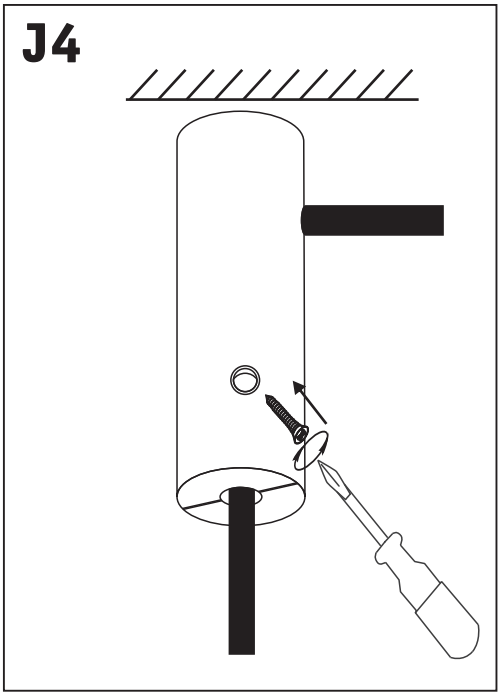
J4

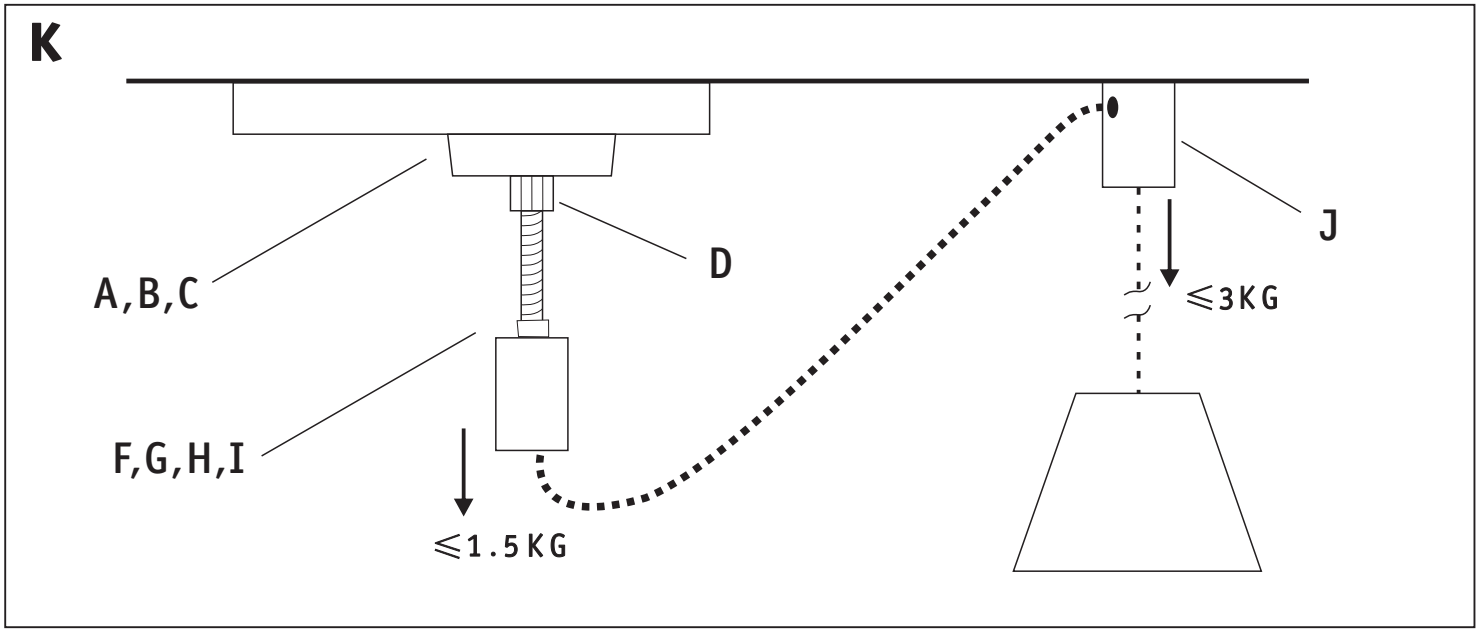
K
A,B,C
D
J
≤3KG
F,G,H,I
≤1.5KG