SAFETY INSTRUCTIONS

SAFETY INSTRUCTIONS

0,1,2,3,4,5b,6,7,8,9,10,11,
12,13,14,15,16,18,20,21,22,23,24,25,27
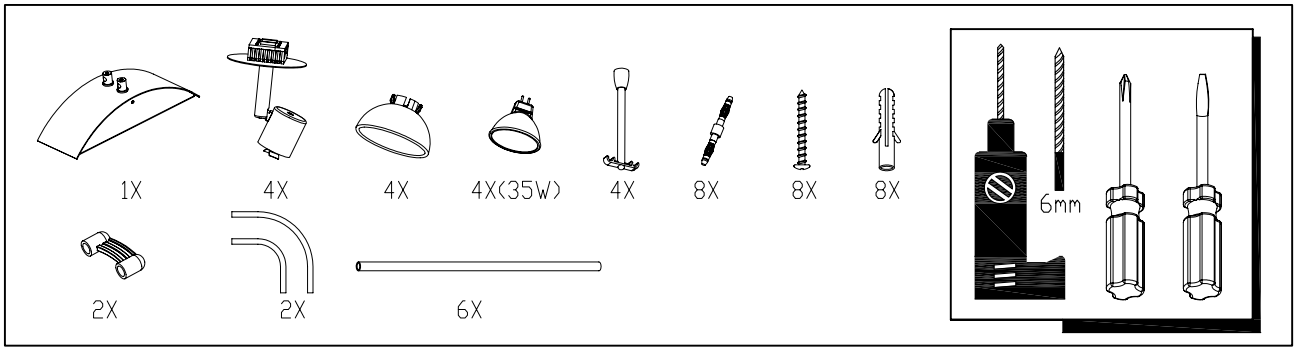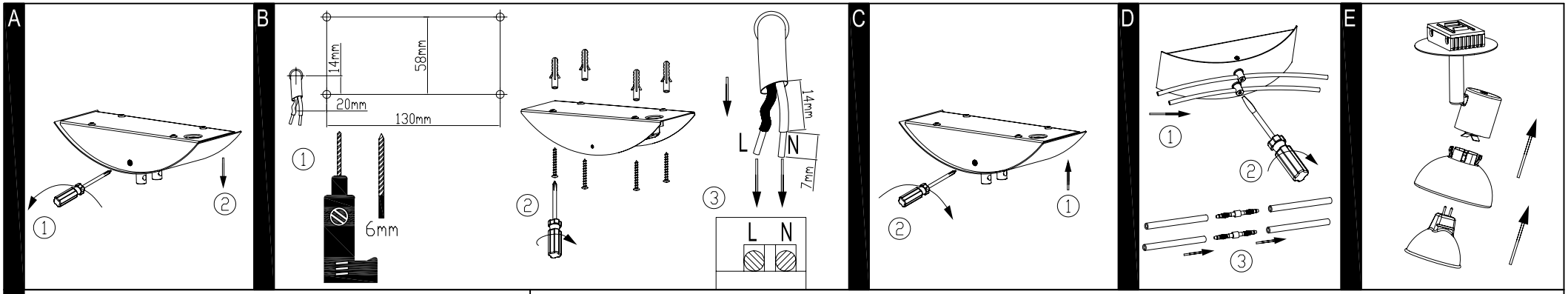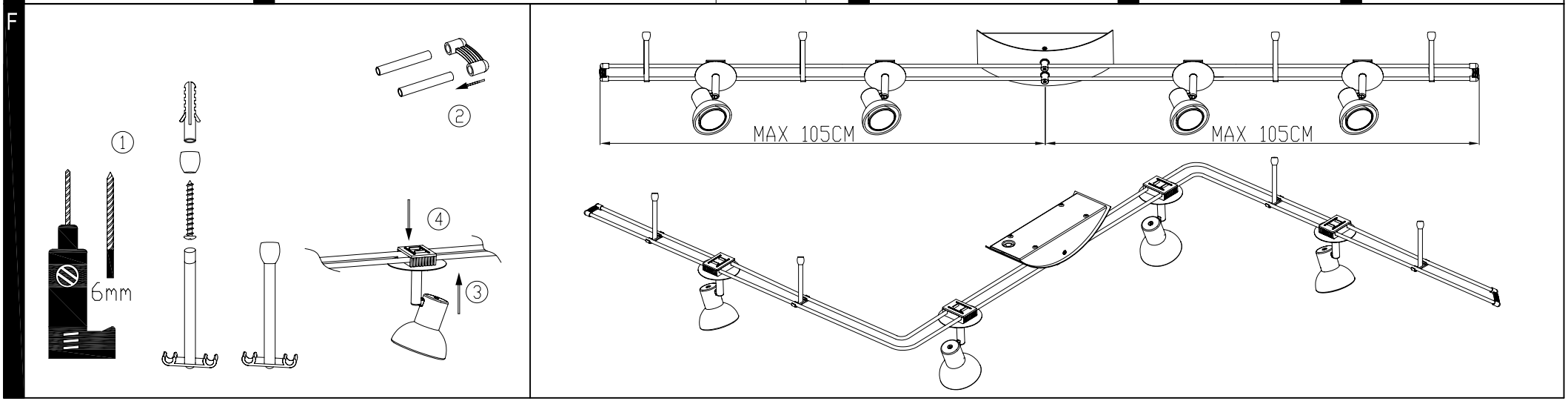
PAULMANN *LICHT* GmbH
Quezinger Feld 2 • D-31832 Springe
www.Paulmann.com
+49 (0) 5041 998 389
INFO-LINE
7⁰⁰ — 20⁰⁰ Mo.-Do.
7⁰⁰ — 17⁰⁰ Fr.