Paulmann

Safety Instructions

0,1,4,7,8,9,11,15,
17,20,22

Info Hotline +49 (0) 5041 998 389
Mon.-Do. 7^{00}-20^{00}
Fr. 7^{00}-17^{00}

Paulmann Licht GmbH
31832 Springe / Germany
www.paulmann.com

Art.-Nr.:
997. 38/
39/40/41/
42/43/44/
45/49/54/
55/56
(+MA 173)
PBO 10/09

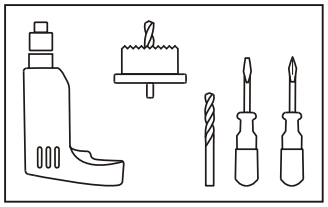

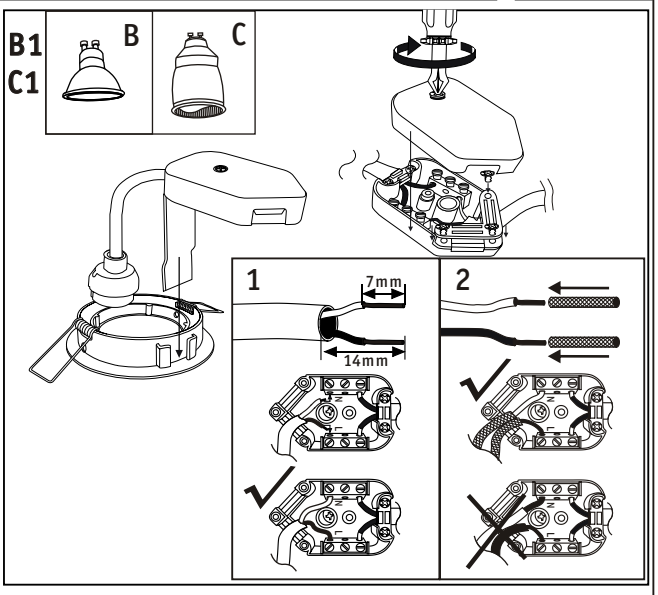

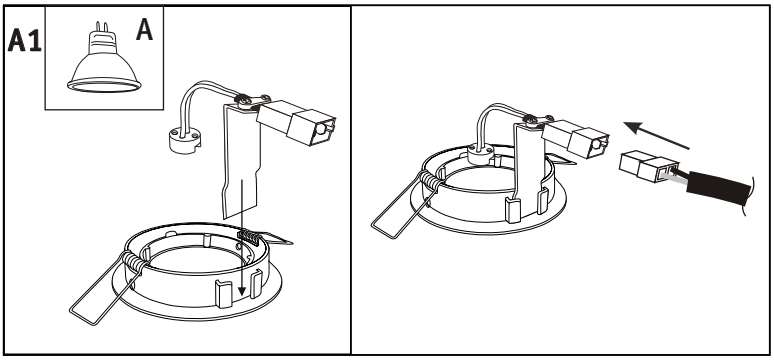

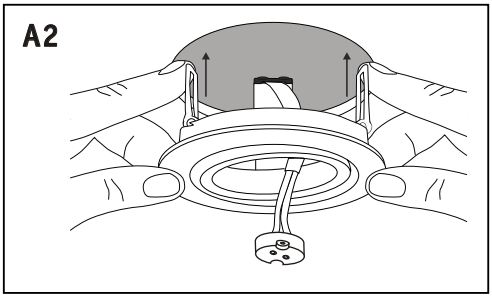

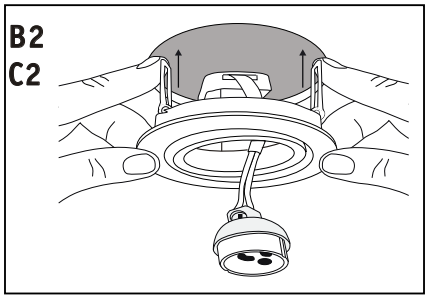

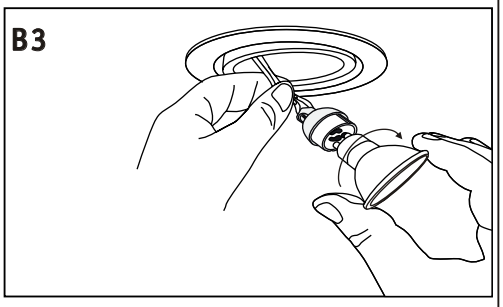

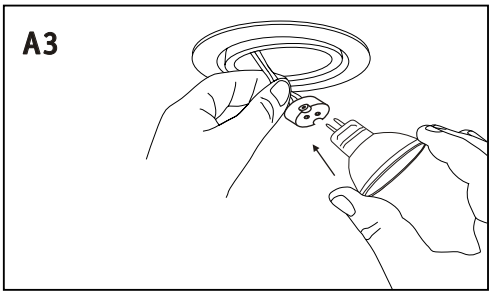

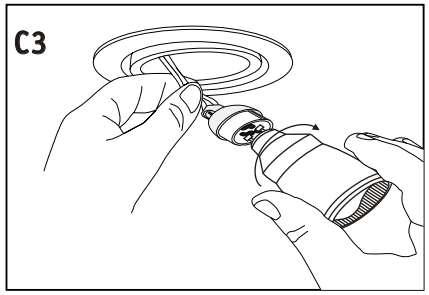

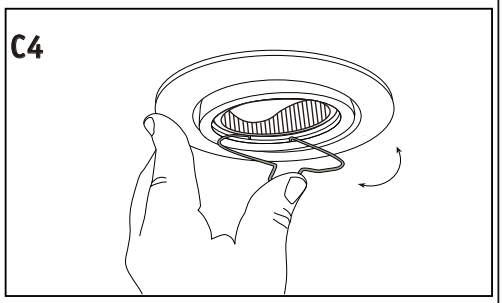

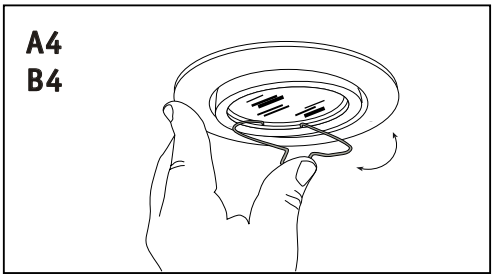

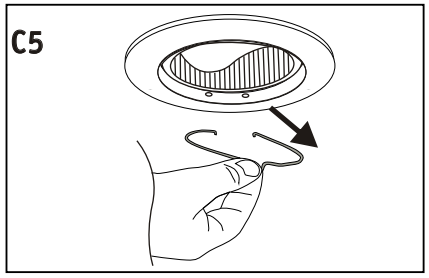

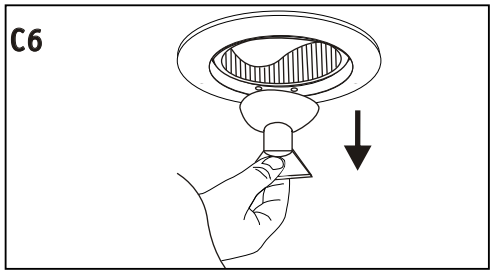

M M	⌀ [mm]	COOL BEAM [mm]	⌀ [mm]	m [m]	[mm]	x [cm]	[mm]	[mm]	[mm]	[mm]
IP 44	79	50	51	0.5	70	≥20	5–20	≥60	≥90	≥110
IP 23	83	50	51	0.5	68	≥20	5–20	≥60	≥90	≥110